Distribution Overhead Construction Standard Section 2 LV Constructions

Record Number: R0003152039

Version Number: 3.0

Date: January 2026

Authorisations

Action	Name and title	Date
Prepared by	Tetiana Knyzhka	19/11/2025
Reviewed by	Brock Wolski	26/11/2025
Authorised by	Angus Ketley	03/12/2025
Review cycle	5 Years	

Responsibilities

This document is the responsibility of the Asset Management Systems and Standards Team, Tasmanian Networks Pty Ltd, ABN 24 167 357 299 (hereafter referred to as "TasNetworks").

Please contact the Asset Management Systems and Standards Team with any queries related to this standard.

© Tasmanian Networks Pty Ltd 2026

Record of revisions

Version	Description	Date
3.0	Major update: Section fully revised to reflect current construction requirements.	19/01/2026

D-OHC-B100-SD-001	LV CONSTRUCTIONS. ASSEMBLIES EXPLANATION
D-OHC-B101-SD-001	LV CONSTRUCTIONS. LVABC GENERAL NOTES & CODES
D-OHC-B102-SD-001	LV CONSTRUCTIONS. LVABC SUB-ASSEMBLIES. EYE-BOLTS
D-OHC-B103-SD-001	LV CONSTRUCTIONS. LVABC ASSEMBLIES. INTERMEDIATE
D-OHC-B103-SD-002	LV CONSTRUCTIONS. LVABC ASSEMBLIES. INTERMEDIATE OFFSET
D-OHC-B104-SD-001	LV CONSTRUCTIONS. LVABC ASSEMBLIES. DEAD END STRAIN
D-OHC-B105-SD-001	LV CONSTRUCTIONS. LVABC ASSEMBLIES. STRAIN
D-OHC-B105-SD-002	LV CONSTRUCTIONS. LVABC ASSEMBLIES. STRAIN RIGHT ANGLED
D-OHC-B105-SD-003	LV CONSTRUCTIONS. LVABC ASSEMBLIES. STRAIN TRANSITION LVABC TO LV BARE
D-OHC-B106-SD-001	LV CONSTRUCTIONS. LVABC ASSEMBLIES. TEE OFF
D-OHC-B107-SD-001	LV CONSTRUCTIONS. LVABC ASSEMBLIES. CROSSOVER AT POLE
D-OHC-B108-SD-001	LV CONSTRUCTIONS. LVABC ASSEMBLIES. PARALLEL CIRCUITS. INTERMEDIATE
D-OHC-B108-SD-002	LV CONSTRUCTIONS. LVABC ASSEMBLIES. PARALLEL CIRCUITS. DEAD END & STRAIN
D-OHC-B109-SD-001	LV CONSTRUCTIONS. LV BARE GENERAL NOTES & CODES
D-OHC-B110-SD-001	LV CONSTRUCTIONS. LV BARE SUB-ASSEMBLIES. CROSSARMS
D-OHC-B110-SD-002	LV CONSTRUCTIONS. LV BARE SUB-ASSEMBLIES. INSULATORS
D-OHC-B110-SD-003	LV CONSTRUCTIONS. LV BARE SUB-ASSEMBLIES. STRAIN/DEAD END & PIN INSULATORS
D-OHC-B110-SD-004	LV CONSTRUCTIONS. LV BARE SUB-ASSEMBLIES. DEAD END & EXTRA PIN INSULATORS
D-OHC-B110-SD-005	LV CONSTRUCTIONS. LV BARE SUB-ASSEMBLIES. STRAIN & EXTRA PIN INSULATORS
D-OHC-B110-SD-006	LV CONSTRUCTIONS. LV BARE SUB-ASSEMBLIES. CROSSARM BRACE
D-OHC-B111-SD-001	LV CONSTRUCTIONS. LV BARE ASSEMBLIES. INTERMEDIATE
D-OHC-B112-SD-001	LV CONSTRUCTIONS. LV BARE ASSEMBLIES. DEAD END
D-OHC-B113-SD-001	LV CONSTRUCTIONS. LV BARE ASSEMBLIES. STRAIN
D-OHC-B114-SD-001	LV CONSTRUCTIONS. LV BARE ASSEMBLIES. INTERMEDIATE CROSSOVER
D-OHC-B114-SD-002	LV CONSTRUCTIONS. LV BARE ASSEMBLIES. INTERMEDIATE OFFSET
D-OHC-B115-SD-001	LV CONSTRUCTIONS. LV BARE ASSEMBLIES. RIGHT ANGLE STRAIN
D-OHC-B116-SD-001	LV CONSTRUCTIONS. LV BARE ASSEMBLIES. TEE OFF
D-OHC-B117-SD-001	LV CONSTRUCTIONS. LV BARE ASSEMBLIES. CROSSOVER

D-OHC-B118-SD-001	LV CONSTRUCTIONS. LV BARE ASSEMBLIES. UNDERGROUND TO OVERHEAD TRANSITION
	LIST OF BOMs

CAUTION : Printed document is uncontrolled.

MATERIAL
145646

SUB-ASSEMBLY
710156

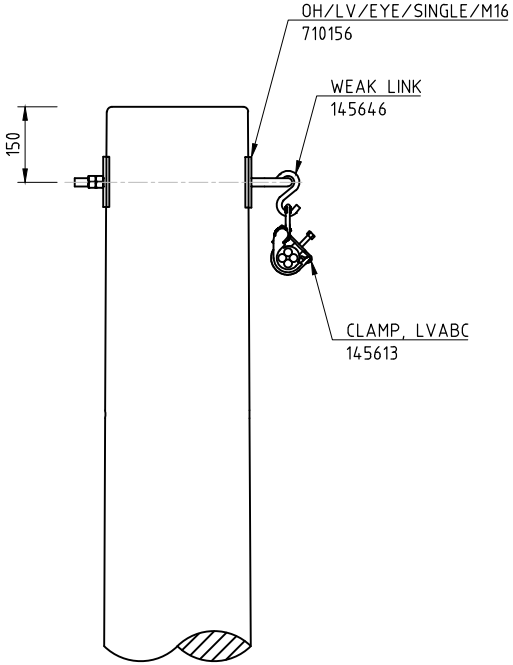

ASSEMBLY
710160

NOTES:

1. A MATERIAL IS TYPICALLY BOLTS, NUTS, WASHERS ETC. THAT IS PART OF A SUB-ASSEMBLY OR ASSEMBLY. IT'S DEFINED SEPARATELY TO SIMPLIFY DESIGN AND CONSTRUCTION.
2. A SUB-ASSEMBLY IS A SMALLER, SELF-CONTAINED UNIT THAT IS PART OF A LARGER ASSEMBLY. IT'S DEFINED SEPARATELY TO SIMPLIFY DESIGN AND CONSTRUCTION.
3. AN ASSEMBLY IS THE MAJOR STRUCTURE THAT IS MADE UP OF MULTIPLE PARTS OR SUB-ASSEMBLIES AND MATERIAL. IT REPRESENTS THE COMPLETE UNIT THAT IS INSTALLED IN THE FIELD.
4. MATERIAL NUMBERS TYPICALLY START WITH 1XXXXX, 2XXXXX, 3XXXXX, 4XXXXX, 5XXXXX, 8XXXXX, OR 0XXXXX (LEADING ZERO IS OFTEN NOT SHOWN).
5. SUB-ASSEMBLY DESCRIPTIONS BEGIN WITH "OH/" AND ARE ASSOCIATED WITH 710XXX NUMBERS.
6. ASSEMBLY DESCRIPTIONS BEGIN WITH "22", "33", "LVABC", "LV", OR "SERV", AND ALSO USE 710XXX NUMBERS.

ASSEMBLY, SHOWN ON THE DRAWING

SUB-ASSEMBLY

MATERIAL

MATERIAL	SAP ASSEMBLY	710160
	DESCRIPTION	LVABC/1/1/50
710156	OH, SINGLE EYE, M16 NUT (OH/LV/EYE/SINGLE/M16)	1
145613	CLAMP, LVABC SUSPENSION, 4x25mm² - 4x95mm²	1
145646	WEAK LINK, LVABC 10x100mm ABCWL-8	1

ALTERATIONS

ORIGINAL ISSUE

REFERENCE

NEW DRAWING:

TasNetworks

DRAWN	MEGAVAR PTY LTD
DRAFTING CHECK	MEGAVAR PTY LTD
DESIGNED BY	T.KNYZHKA
CHECKED BY	B.WOLSKI
APPROVED BY	A.KETLEY
DATE APPROVED	05-11-2025

© Tasmanian Networks PTY. LTD.
trading as TasNetworks
ABN: 24 167 357 299

NO PART OF THIS DRAWING MAY BE REPRODUCED, STORED IN A RETRIEVAL SYSTEM IN ANY FORM, OR TRANSMITTED BY ANY MEANS WITHOUT THE PRIOR PERMISSION OF TASNETWORKS

TITLE
LV CONSTRUCTIONS
ASSEMBLIES EXPLANATION

SCALE
NTS

A4

D - OHC - B100 - SD - 001

REVISION
A

EMF/PDF CREATION DATE 05/11/2025

BM DWG NO D-OHC-B100-SD-001

BM REV A

DWG STATUS STANDARD

CAUTION : Printed document is uncontrolled.

LVABC CONSTRUCTION CODES

FOR SUB-ASSEMBLIES:

OH / LV / EYE / SINGLE / M16

DENOTER

VOLTAGE

LV - LOW VOLTAGE

SUB ASS. TYPE

EYE - EYE BOLT USED TO HOLD LVABC

SUB TYPE

SINGLE - SINGLE EYE
DOUBLE - DOUBLE EYE

DETAILS

M16 - M16 BOLT

FOR ASSEMBLIES:

LVABC / S / 3 / 95

VOLTAGE

LVABC - LOW VOLTAGE ABC CABLE

CONSTRUCTION TYPE

I - INTERMEDIATE
DE - DEAD END
S - STRAIN
RS - RIGHT ANGLED STRAIN
T - TEE OFF
O - OFFSET

PHASES

1 - SINGLE PHASE, 2 CORES
3 - THREE PHASE, 4 CORES

CABLE SIZE

50 - 50mm^2 LVABC CABLE
95 - 95mm^2 LVABC CABLE
150 - 150mm^2 LVABC CABLE

GENERAL NOTES FOR LVABC CONSTRUCTIONS:

1. TO MINIMISE DAMAGE TO SERVICES FROM FALLING TREES / BRANCHES INSTALL LV OVERHEAD SERVICES IN A POSITION TO ALLOW LVABC TO BREAK AWAY IF STRUCK BY FALLING TREES OR LIMBS. SERVICES AT THE SAME HEIGHT OR LOWER WILL BE ACCEPTED ON THE OPPOSITE SIDE OF THE POLE.
2. TO MINIMISE DAMAGE FROM FALLING TREES / BRANCHES INSTALL LVABC TEE OFF ABOVE INTERMEDIATE LVABC POLE TOPS. THE SAME HEIGHT OR LOWER WILL BE ACCEPTED ON THE OPPOSITE SIDE OF THE POLE.
3. PARALLEL LVABC TO BE BRIDGED AT TRANSFORMER FUSES, STRAIN POSITIONS, DEAD ENDS OR AS SPECIFIED BY DESIGN.
4. CRIMP CONNECTIONS ARE PREFERRED FOR NON-TENSION JOINTS. IF INSULATED PIERCING CONNECTORS ARE USED, THE NEUTRAL SHALL HAVE DOUBLE CONNECTIONS TO MAINS AT TRANSFORMERS, TEE OFFS AND ANY OTHER CONNECTION WHERE CRIMP FITTINGS CANNOT BE USED.
5. ENSURE LOCK NUTS ARE INSTALLED ON ALL BOLTS PASSING THROUGH POLE WITH A MINIMUM OF ONE VISIBLE THREAD PAST THE LOCK NUT.
6. USE HEAT/COLD SHRINK TO COVER BARE LUGS OR CONDUCTORS ON 630AMP FUSE HOLDER.
7. WEAK LINK TO BE USED ON ALL INTERMEDIATE CONSTRUCTIONS AND STRAIN CONSTRUCTIONS FOR 50mm^2 2C-1PH CABLE ON CLOSED-EYE BOLTS ONLY.
8. DRAWINGS SHOW 2C-1PH CABLE FOR CLARITY, OTHER SIZES SIMILAR.
9. ALL DIMENSIONS ARE IN MILLIMETRES UNLESS OTHERWISE STATED.

ALTERATIONS

ORIGINAL ISSUE

REFERENCE

NEW DRAWING: SUPERSEDES D-OHC-B001-SD-001

TasNetworks

DRAWN	NEGAVAR PTY LTD
DRAFTING CHECK	NEGAVAR PTY LTD
DESIGNED BY	T.JOIYZHKA
CHECKED BY	B.WOLSKI
APPROVED BY	A.KETLEY
DATE APPROVED	05-11-2025

© Tasmanian Networks PTY. LTD. trading as TasNetworks ABN: 24 167 357 299

NO PART OF THIS DRAWING MAY BE REPRODUCED, STORED IN A RETRIEVAL SYSTEM IN ANY FORM, OR TRANSMITTED BY ANY MEANS WITHOUT THE PRIOR PERMISSION OF TASNETWORKS

TITLE: LV CONSTRUCTIONS
LVABC GENERAL NOTES & CODES

SCALE: NTS

A4

D - OHC - B101 - SD - 001

REVISION: A

EMF/PDF CREATION DATE 05/11/2025

BM DWG NO D-OHC-B101-SD-001

BM REV A

DWG STATUS STANDARD

CAUTION : Printed document is uncontrolled.

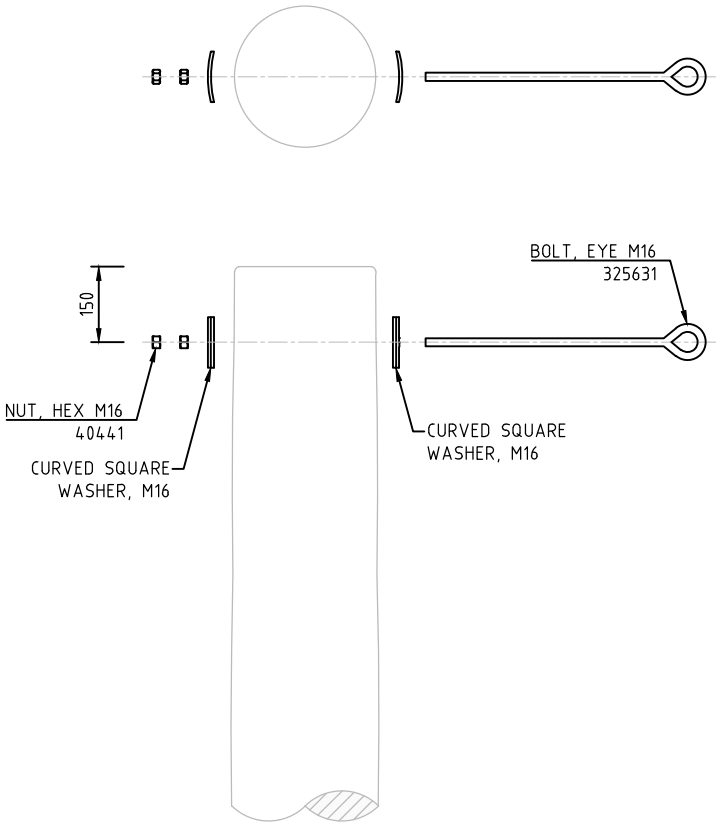

SINGLE EYE-BOLT ASSEMBLY
710156

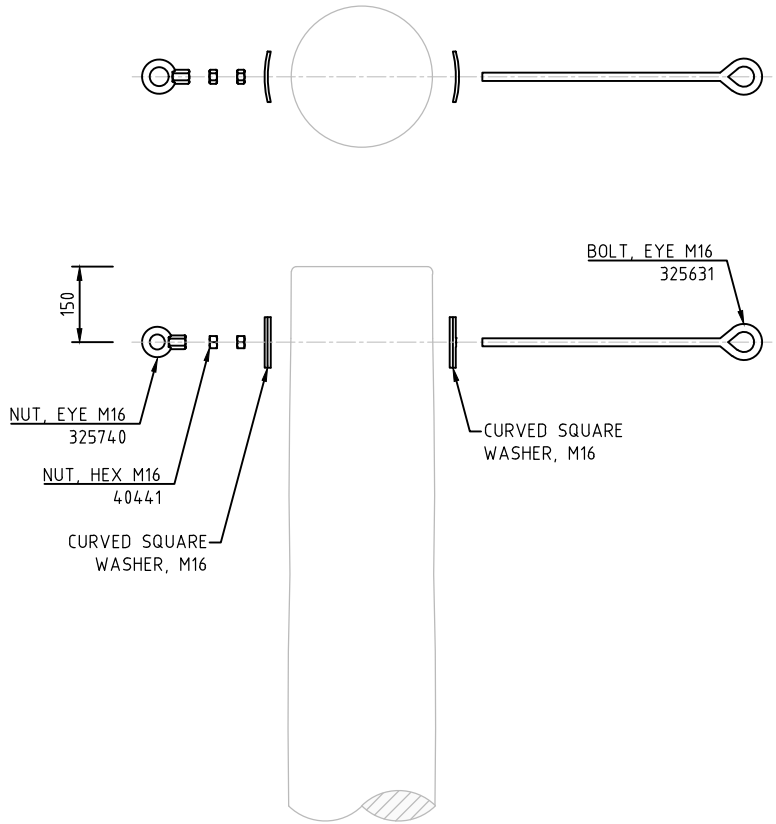

DOUBLE EYE-BOLT ASSEMBLY
710158

MATERIAL	SAP ASSEMBLY	710156	710158
	DESCRIPTION	OH/LV/EYE/SINGLE/M16	OH/LV/EYE/DOUBLE/M16
325631	EYE-BOLT, OPEN M16x350mm FIXED WASHER	1	1
325740	NUT, EYE M16		1
40441	NUT, HEX M16 THREAD GALVANISED STEEL	1	1

NOTES:

1. SEE GENERAL NOTES FOR LVABC.
2. EYE ORIENTATION TO SUIT APPLICATION.
3. ALL DIMENSIONS ARE IN MILLIMETRES UNLESS OTHERWISE STATED.

ALTERATIONS

ORIGINAL ISSUE

REFERENCE

NEW DRAWING

TasNetworks

DRAWN	MEGAVAR PTY LTD
DRAFTING CHECK	MEGAVAR PTY LTD
DESIGNED BY	T.JOVYZHKA
CHECKED BY	B.WOLSKI
APPROVED BY	A.KETLEY
DATE APPROVED	05-11-2025

© Tasmanian Networks PTY. LTD.
trading as TasNetworks
ABN: 24 167 357 299

NO PART OF THIS DRAWING MAY BE REPRODUCED, STORED IN A RETRIEVAL SYSTEM IN ANY FORM, OR TRANSMITTED BY ANY MEANS WITHOUT THE PRIOR PERMISSION OF TASNETWORKS

TITLE
LV CONSTRUCTIONS
LVABC SUB-ASSEMBLIES
EYE-BOLTS

SCALE NTS

A4

D - OHC - B102 - SD - 001

REVISION A

EMF/PDF CREATION DATE 05/11/2025

BM DWG NO D-OHC-B102-SD-001

BM REV A

DWG STATUS STANDARD

CAUTION : Printed document is uncontrolled.

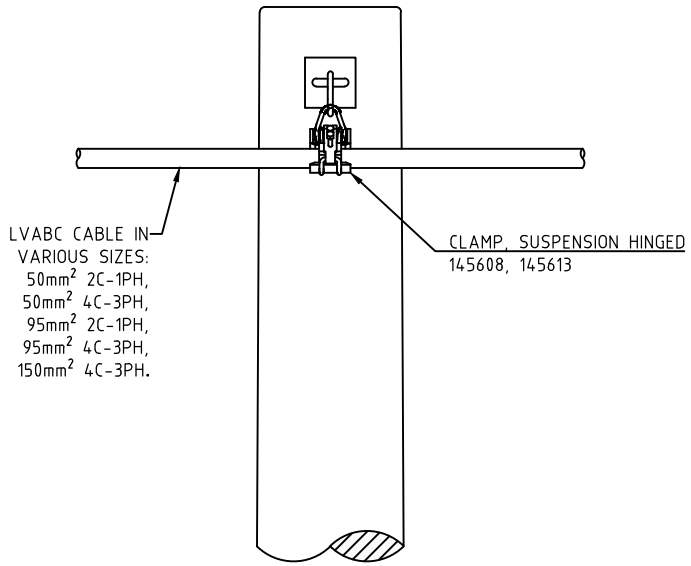

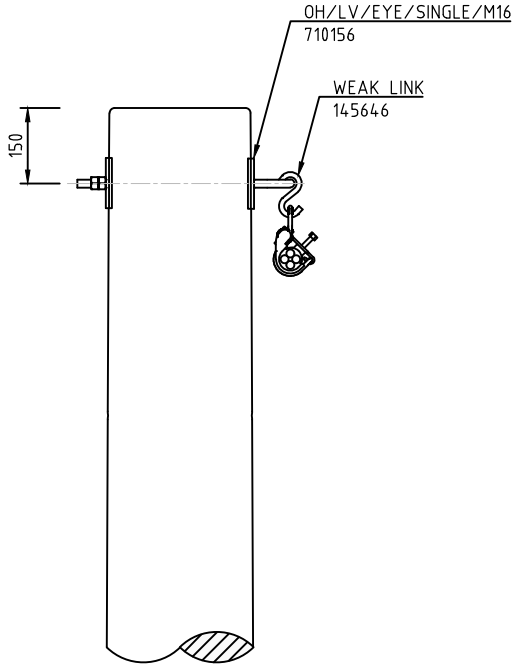

NOTES:

1. SEE GENERAL NOTES FOR LVABC.
2. WEAK LINK TO BE USED ON ALL INTERMEDIATE CONSTRUCTIONS FOR 50 mm2 2C-1PH CABLE ONLY.
3. MAXIMUM ANGLES FOR SINGLE SUSPENSION CLAMPS REFER TO "DISTRIBUTION OVERHEAD STANDARD - POLE TOP CONSTRUCTIONS".
4. ALL DIMENSIONS ARE IN MILLIMETRES UNLESS OTHERWISE STATED.

MATERIAL	SAP ASSEMBLY	710160	710161	710162	710163	710164
	DESCRIPTION	LVABC/I/1/50	LVABC/I/3/50	LVABC/I/1/95	LVABC/I/3/95	LVABC/I/3/150
710156	OH, SINGLE EYE, M16 NUT (OH/LV/EYE/SINGLE/M16)	1	1	1	1	1
145608	CLAMP, SUSPENSION 4x150mm² LVABC ALUM	-	-	-	-	1
145613	CLAMP, LVABC SUSPENSION, 4x25mm² - 4x95mm²	1	1	1	1	-
145646	WEAK LINK, LVABC 10x100mm ABCWL-8	1	1	1	1	1

ALTERATIONS

ORIGINAL ISSUE

REFERENCE

NEW DRAWING: SUPERSEDES
D-OHC-B002-SD-001
D-OHC-B002-SD-002

TasNetworks

DRAWN	MEGAVAR PTY LTD
DRAFTING CHECK	MEGAVAR PTY LTD
DESIGNED BY	T.JOVZHKA
CHECKED BY	B.WOLSKI
APPROVED BY	A.KETLEY
DATE APPROVED	05-11-2025

© Tasmanian Networks PTY. LTD. trading as TasNetworks ABN: 24 167 357 299

NO PART OF THIS DRAWING MAY BE REPRODUCED, STORED IN A RETRIEVAL SYSTEM IN ANY FORM, OR TRANSMITTED BY ANY MEANS WITHOUT THE PRIOR PERMISSION OF TASNETWORKS

TITLE: LV CONSTRUCTIONS
LVABC ASSEMBLIES
INTERMEDIATE

SCALE: NTS

A4

D - OHC - B103 - SD - 001

REVISION: A

EMF/PDF CREATION DATE 05/11/2025

BM DWG NO D-OHC-B103-SD-001

BM REV A

DWG STATUS STANDARD

CAUTION : Printed document is uncontrolled.

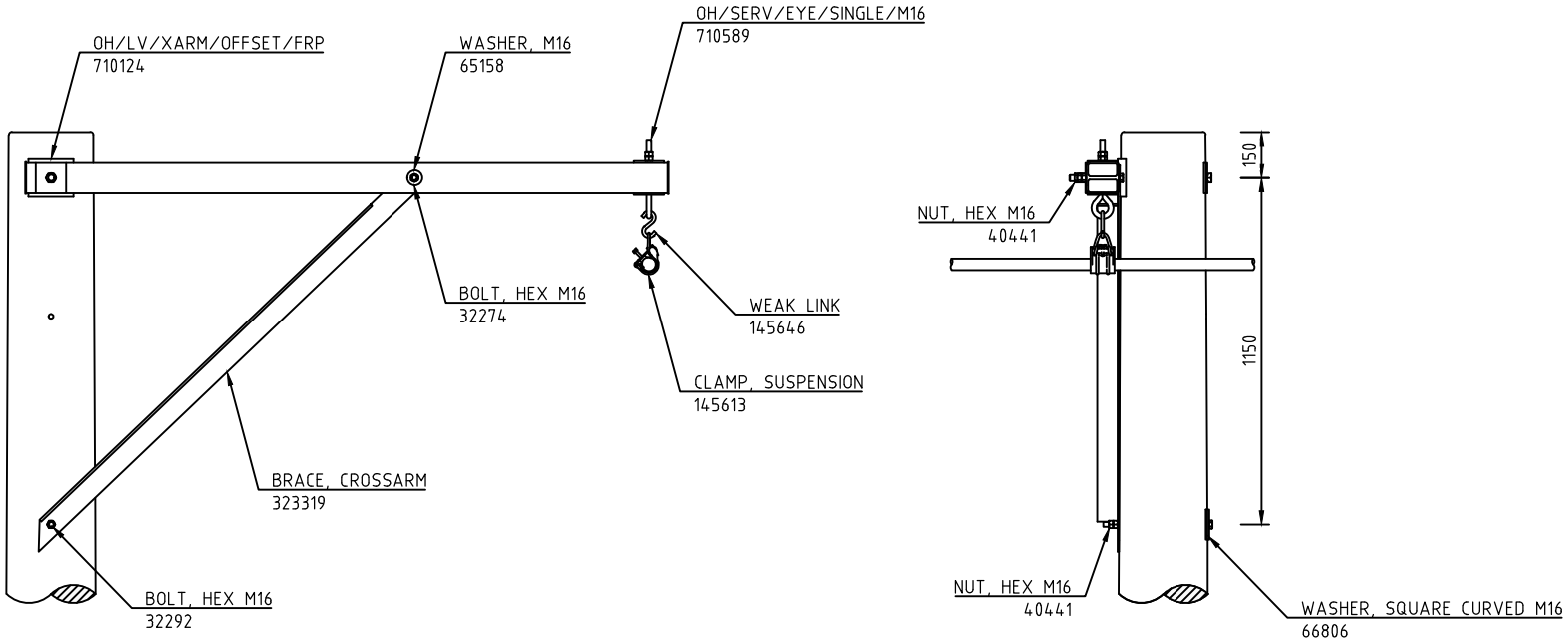

MATERIAL	SAP ASSEMBLY	710593
	DESCRIPTION	LVABC/O/3/95
710124	OH, LV, OFFSET FIBREGLASS CROSSARM (OH/LV/XARM/OFFSET/FRP)	1
323319	BRACE, CROSSARM 1854x75x75x8mm THICK GAL.	1
65158	WASHER, FLAT ROUND M16x50mm GAL.	1
32276	BOLT, HEX HEAD M16x150mm GAL. C/W NUT	1
32292	BOLT, HEX HEAD M16x450mm C/W NUT	1
145646	WEAK LINK, LVABC 10x100mm ABCWL-8	1
145613	CLAMP, LVABC SUSPENSION, 4x25mm^2 - 4x95mm^2	1
710589	BOLT, EYE, M16x180mm (OH/SERV/EYE/SINGLE/M16)	1
40441	NUT,HEX M16 THREAD GALANISED STEEL	2
66806	WASHER, CURVED 75 X 75MM TO FIT M16	1

NOTES:

1. SEE GENERAL NOTES FOR LVABC.
2. WEAK LINK TO BE USED WITH 50mm2 2C-1PH ONLY.
3. ALL DIMENSIONS ARE IN MILLIMETRES UNLESS OTHERWISE STATED.

ALTERATIONS

ORIGINAL ISSUE

REFERENCE

NEW DRAWING

TasNetworks

DRAWN	MEGAVAR PTY LTD
DRAFTING CHECK	MEGAVAR PTY LTD
DESIGNED BY	T.JOVZHKA
CHECKED BY	B.WOLSKI
APPROVED BY	A.KETLEY
DATE APPROVED	05-11-2025

© Tasmanian Networks PTY. LTD. trading as TasNetworks ABN: 24 167 357 299

NO PART OF THIS DRAWING MAY BE REPRODUCED, STORED IN A RETRIEVAL SYSTEM IN ANY FORM, OR TRANSMITTED BY ANY MEANS WITHOUT THE PRIOR PERMISSION OF TASNETWORKS

TITLE: LV CONSTRUCTIONS LVABC ASSEMBLIES INTERMEDIATE OFFSET

SCALE: NTS

A4

D - OHC - B103 - SD - 002

REVISION: A

EMF/PDF CREATION DATE 05/11/2025

BM DWG NO D-OHC-B103-SD-002

BM REV A

DWG STATUS STANDARD

CAUTION : Printed document is uncontrolled.

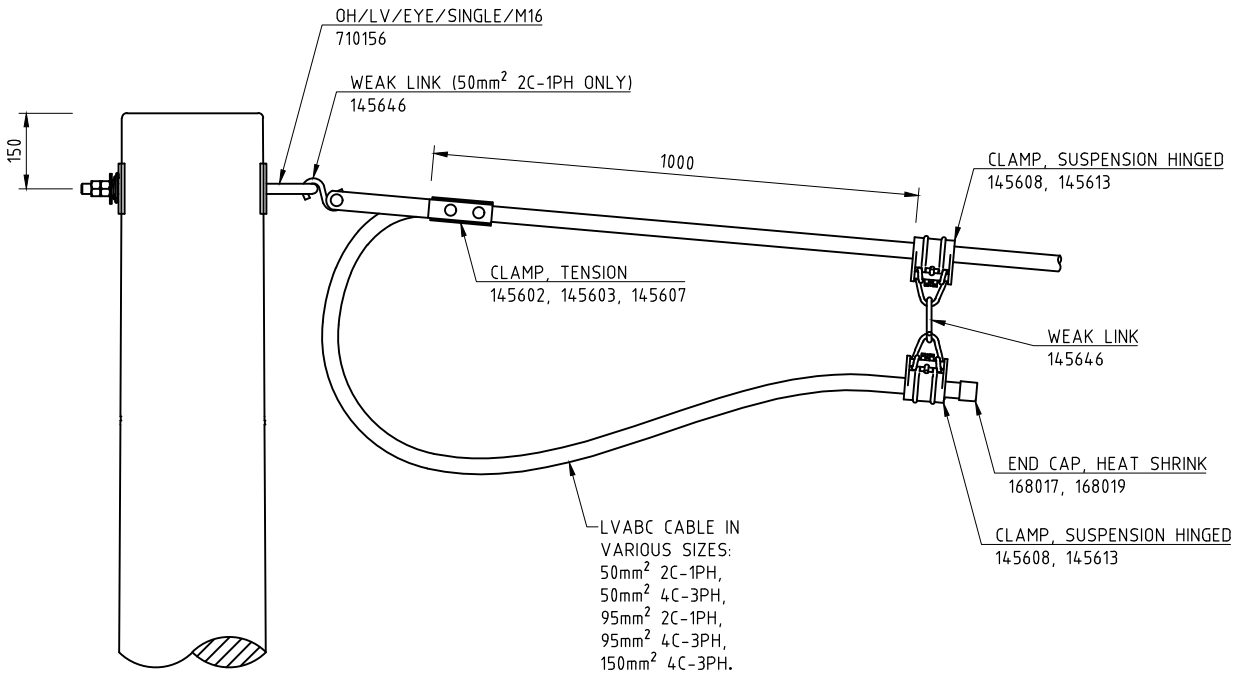

NOTES:

1. SEE GENERAL NOTES FOR LVABC.
2. WEAK LINK TO BE USED WITH 50mm² 2C-1PH ONLY.
3. ALL DIMENSIONS ARE IN MILLIMETRES UNLESS OTHERWISE STATED.

MATERIAL	SAP ASSEMBLY	710170	710171	710172	710173	710174
	DESCRIPTION	LVABC/DE/1/50	LVABC/DE/3/50	LVABC/DE/1/95	LVABC/DE/3/95	LVABC/DE/3/150
168017	END CAP, HEAT SHRINK 17-8mm CABLE RANGE	2	4	2	4	-
168019	END CAP, HEAT SHRINK 30-17mm CABLE RANGE	-	-	-	-	4
710156	OH, SINGLE EYE, M16 NUT (OH/LV/EYE/SINGLE/M16)	1	1	1	1	1
145602	CLAMP, TENSION 4x50mm² ABC	-	1	-	-	-
145603	CLAMP, TENSION 2x50mm² - 2x95mm² ABC	1	-	1	-	-
145607	CLAMP, TENSION 4x95mm² - 4x150mm² ABC	-	-	-	1	1
145646	WEAK LINK, LVABC 10mmx100mm ABCWL-8	2	1	1	1	1
145608	CLAMP, SUSPENSION 4x150mm² LVABC ALUM	-	-	-	-	2
145613	CLAMP, LVABC SUSPENSION, 4x25mm² - 4x95mm²	2	2	2	2	-

ALTERATIONS

ORIGINAL ISSUE

REFERENCE

NEW DRAWING: SUPERSEDES
D-OHC-B004-SD-001
D-OHC-B004-SD-002

TasNetworks

DRAWN	MEGAVAR PTY LTD
DRAFTING CHECK	MEGAVAR PTY LTD
DESIGNED BY	T.KNYZHKA
CHECKED BY	B.WOLSKI
APPROVED BY	A.KETLEY
DATE APPROVED	05-11-2025

© Tasmanian Networks PTY. LTD.
trading as TasNetworks
ABN: 24 167 357 299

NO PART OF THIS DRAWING MAY BE REPRODUCED, STORED IN A RETRIEVAL SYSTEM IN ANY FORM, OR TRANSMITTED BY ANY MEANS WITHOUT THE PRIOR PERMISSION OF TASNETWORKS

TITLE
LV CONSTRUCTIONS
LVABC ASSEMBLIES
DEAD END STRAIN

SCALE NTS

A4

D - OHC - B104 - SD - 001

REVISION A

BM DWG NO D-OHC-B104-SD-001

BM REV A

EMF/PDF CREATION DATE 05/11/2025

DWG STATUS STANDARD

CAUTION : Printed document is uncontrolled.

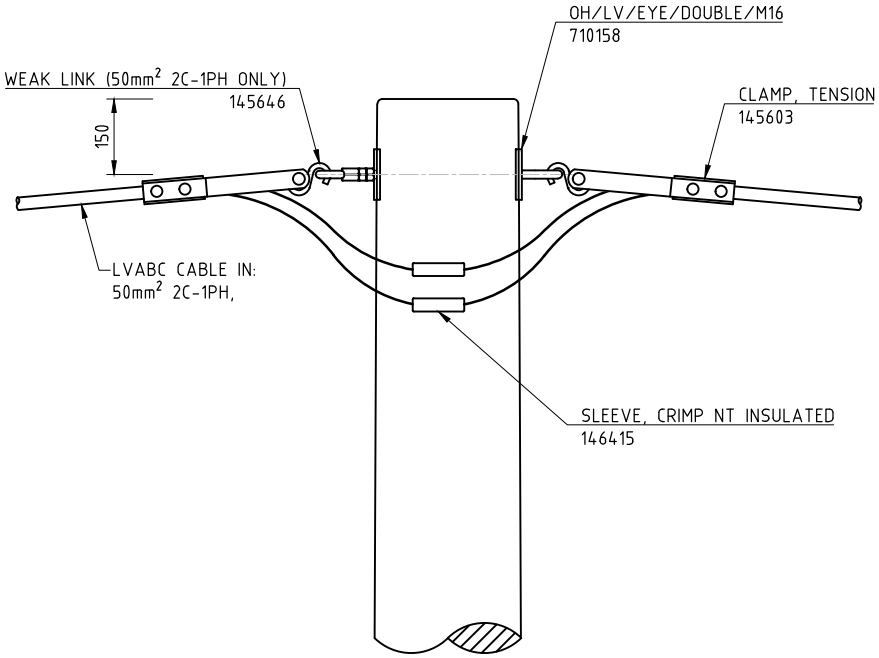

LVABC STRAIN
(50mm² 2C-1PH)

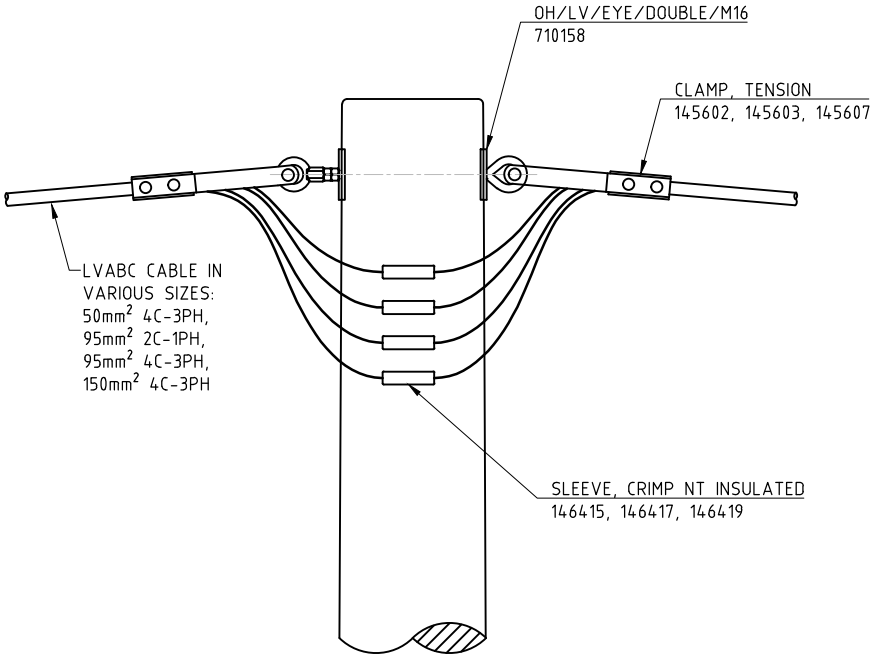

LVABC STRAIN
(4C-3PH SHOWN)

NOTES:

1. SEE GENERAL NOTES FOR LVABC.
2. MAXIMUM ANGLES FOR AN INLINE STRAIN REFER TO "DISTRIBUTION OVERHEAD STANDARD - POLE TOP CONSTRUCTIONS".
3. ANGLE RANGE FOR AN INLINE STRAIN IS 0° TO 30°. ANGLES GREATER THAN 30° SHALL BE A RIGHT-ANGLE STRAIN CONSTRUCTION.
4. WEAK LINK TO BE USED WITH 50mm² 2C-1PH ONLY.
5. IF IPC'S ARE USED NEUTRAL SHALL BE DOUBLE CONNECTION.
6. ALL DIMENSIONS ARE IN MILLIMETRES UNLESS OTHERWISE STATED.

MATERIAL	SAP ASSEMBLY	710175	710176	710177	710178	710179
	DESCRIPTION	LVABC/S/1/50	LVABC/S/3/50	LVABC/S/1/95	LVABC/S/3/95	LVABC/S/3/150
710158	OH, DOUBLE EYE, M16 NUT (OH/LV/EYE/DOUBLE/M16)	1	1	1	1	1
145602	CLAMP, TENSION 4x50mm² ABC	-	2	-	-	-
145603	CLAMP, TENSION 2x50mm² - 2x95mm² ABC	2	-	2	-	-
145607	CLAMP, TENSION 4x95mm² - 4x150mm² ABC	-	-	-	2	2
145646	WEAK LINK, LVABC 10mmx100mm ABCWL-8	2	-	-	-	-
146415	SLEEVE, CRIMP NT INSULATED 50mm² LVABC	2	4	-	-	-
146417	SLEEVE, CRIMP NT INSULATED 95mm² LVABC	-	-	2	4	-
146419	SLEEVE, CRIMP NT INSULATED 150mm² LVABC	-	-	-	-	4

ALTERATIONS

ORIGINAL ISSUE

REFERENCE

NEW DRAWING: SUPERSEDES
D-OHC-B005-SD-001
D-OHC-B005-SD-002

TasNetworks

DRAWN	MEGAVAR PTY LTD
DRAFTING CHECK	MEGAVAR PTY LTD
DESIGNED BY	T.KNYZHKA
CHECKED BY	B.WOLSKI
APPROVED BY	A.KETLEY
DATE APPROVED	05-11-2025

© Tasmanian Networks PTY. LTD.
trading as TasNetworks
ABN: 24 167 357 299

NO PART OF THIS DRAWING MAY BE REPRODUCED, STORED IN A RETRIEVAL SYSTEM IN ANY FORM, OR TRANSMITTED BY ANY MEANS WITHOUT THE PRIOR PERMISSION OF TASNETWORKS

TITLE
LV CONSTRUCTIONS
LVABC ASSEMBLIES
STRAIN

SCALE NTS

A4

D - OHC - B105 - SD - 001

REVISION A

EMF/PDF CREATION DATE 05/11/2025

BM DWG NO D-OHC-B105-SD-001

BM REV A

DWG STATUS STANDARD

CAUTION : Printed document is uncontrolled.

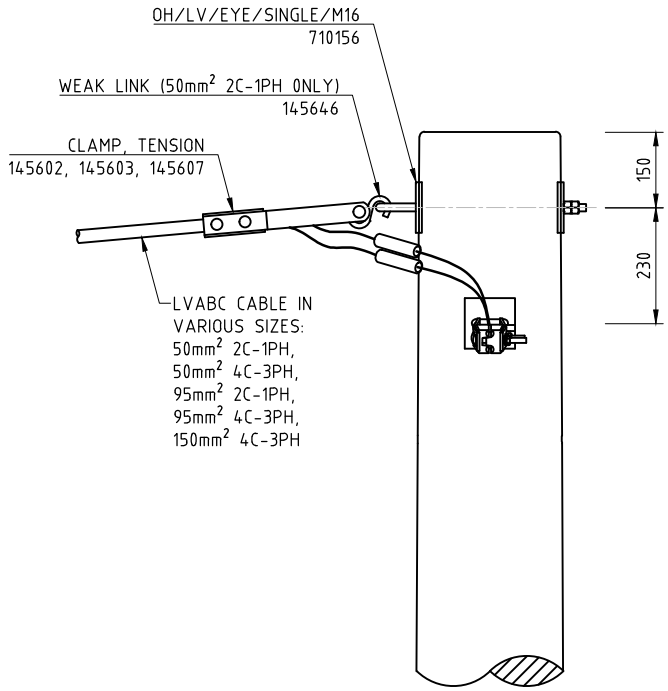

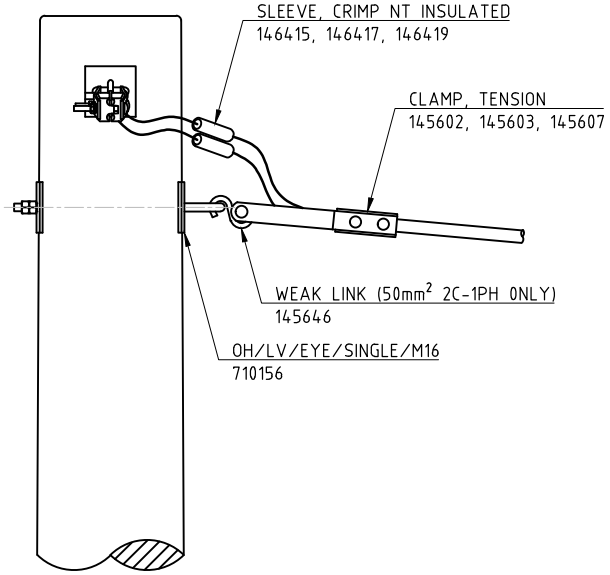

NOTES:

1. SEE GENERAL NOTES FOR LVABC.
2. USE A RIGHT-ANGLE STRAIN CONSTRUCTION FOR ANGLES GREATER THAN 30° DEVIATION.
3. WEAK LINK TO BE USED WITH 50mm² 2C-1PH ONLY.
4. IF IPC'S ARE USED NEUTRAL SHALL BE DOUBLE CONNECTION.
5. ALL DIMENSIONS ARE IN MILLIMETRES UNLESS OTHERWISE STATED.

MATERIAL	SAP ASSEMBLY	710180	710181	710182	710183	710184
	DESCRIPTION	LVABC/RS/1/50	LVABC/RS/3/50	LVABC/RS/1/95	LVABC/RS/3/95	LVABC/RS/3/150
710156	OH, SINGLE EYE, M16 NUT (OH/LV/EYE/SINGLE/M16)	2	2	2	2	2
145602	CLAMP, TENSION 4x50mm² ABC	-	2	-	-	-
145603	CLAMP, TENSION 2x50mm² - 2x95mm² ABC	2	-	2	-	-
145607	CLAMP, TENSION 4x95mm² - 4x150mm² ABC	-	-	-	2	2
145646	WEAK LINK, LVABC 10mmx100mm ABCWL-8	2	-	-	-	-
146415	SLEEVE, CRIMP NT INSULATED 50mm² LVABC	2	4	-	-	-
146417	SLEEVE, CRIMP NT INSULATED 95mm² LVABC	-	-	2	4	-
146419	SLEEVE, CRIMP NT INSULATED 150mm² LVABC	-	-	-	-	4

ALTERATIONS

ORIGINAL ISSUE

REFERENCE

NEW DRAWING: SUPERSEDES
D-OHC-B006-SD-001

TasNetworks

DRAWN	MEGAVAR PTY LTD
DRAFTING CHECK	MEGAVAR PTY LTD
DESIGNED BY	T.KNYZHKA
CHECKED BY	B.WOLSKI
APPROVED BY	A.KETLEY
DATE APPROVED	05-11-2025

© Tasmanian Networks PTY. LTD.
trading as TasNetworks
ABN: 24 167 357 299

NO PART OF THIS DRAWING MAY BE REPRODUCED, STORED IN A RETRIEVAL SYSTEM IN ANY FORM, OR TRANSMITTED BY ANY MEANS WITHOUT THE PRIOR PERMISSION OF TASNETWORKS

TITLE
LV CONSTRUCTIONS
LVABC ASSEMBLIES
STRAIN
RIGHT ANGLED

SCALE: NTS

A4

D - OHC - B105 - SD - 002

REVISION: A

BM DWG NO D-OHC-B105-SD-002

BM REV A

EMF/PDF CREATION DATE 50/11/2025

DWG STATUS STANDARD

CAUTION : Printed document is uncontrolled.

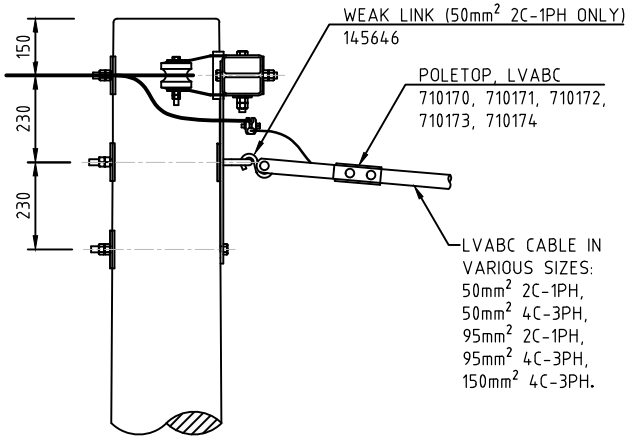

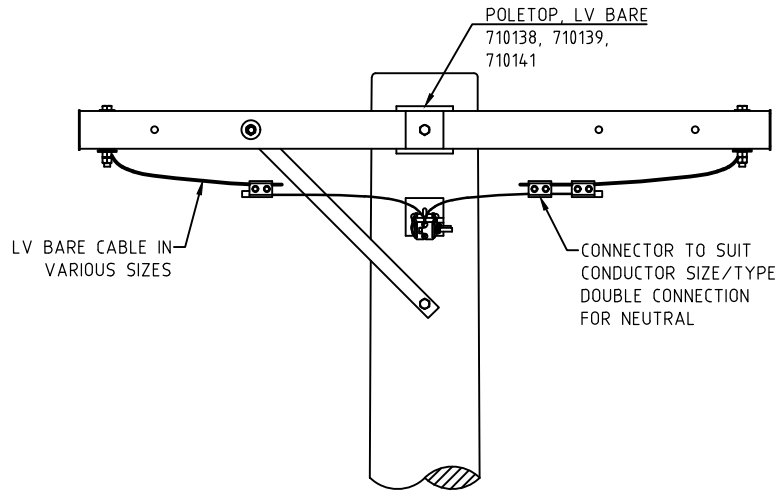

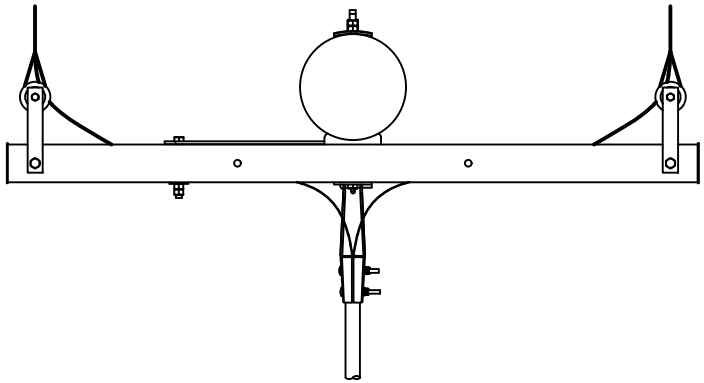

PLAN VIEW

MATERIAL	LV BARE ASSEMBLY				
710138	POLETOP, LV, DEADEND, 1PH, FRP XARM	1	-	-	-
710139	POLETOP, LV, DEADEND, 3PH, FRP XARM	-	1	-	-
710141	POLETOP, LV, DEADEND, 3PH, LONG FRP XARM	-	-	-	1

MATERIAL	LVABC ASSEMBLY					
710170	POLETOP, LVABC 50MM, DEADEND, 1PH (LVABC/DE/1/50)	1	-	-	-	-
710171	POLETOP, LVABC 50MM, DEADEND, 3PH (LVABC/DE/3/50)	-	1	-	-	-
710172	POLETOP, LVABC 95MM, DEADEND, 1PH (LVABC/DE/1/95)	-	-	1	-	-
710173	POLETOP, LVABC 95MM, DEADEND, 3PH (LVABC/DE/3/95)	-	-	-	1	-
710174	POLETOP, LVABC 150MM, DEADEND, 3PH (LVABC/DE/3/150)	-	-	-	-	1

NOTES:

1. SEE GENERAL NOTES FOR LVABC.
2. WEAK LINK TO BE USED FOR 50mm² 2C-1PH CABLE ONLY.
3. NEUTRAL SHALL BE DOUBLE IPC CONNECTION.
4. ALL DIMENSIONS ARE IN MILLIMETRES UNLESS OTHERWISE STATED.

ALTERATIONS

ORIGINAL ISSUE

REFERENCE

NEW DRAWING: SUPERSEDES
D-OHC-B022-SD-001

TasNetworks

DRAWN	MEGAVAR PTY LTD
DRAFTING CHECK	MEGAVAR PTY LTD
DESIGNED BY	T.JOVZHKA
CHECKED BY	B.WOLSKI
APPROVED BY	A.KETLEY
DATE APPROVED	05-11-2025

© Tasmanian Networks PTY. LTD.
trading as TasNetworks
ABN: 24 167 357 299

NO PART OF THIS DRAWING MAY BE REPRODUCED, STORED IN A RETRIEVAL SYSTEM IN ANY FORM, OR TRANSMITTED BY ANY MEANS WITHOUT THE PRIOR PERMISSION OF TASNETWORKS

TITLE
LV CONSTRUCTIONS
LV ASSEMBLIES
STRAIN TRANSITION LVABC TO LV BARE

SCALE NTS

A4

D - OHC - B105 - SD - 003

REVISION A

BM DWG NO D-OHC-B105-SD-003

BM REV A

EMF/PDF CREATION DATE 50/11/2025

DWG STATUS STANDARD

CAUTION : Printed document is uncontrolled.

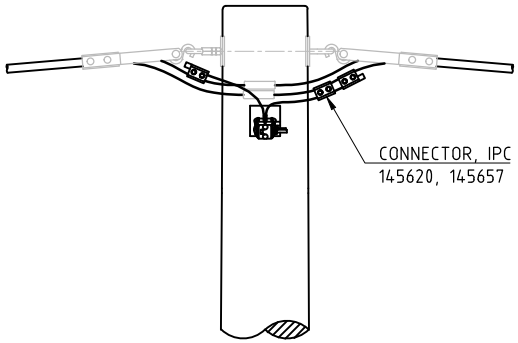

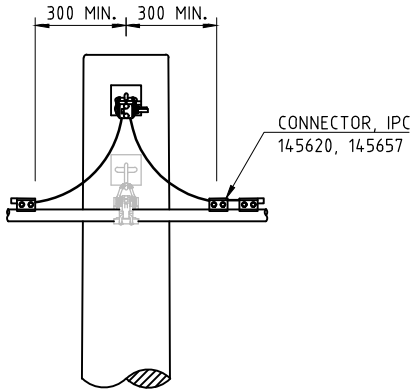

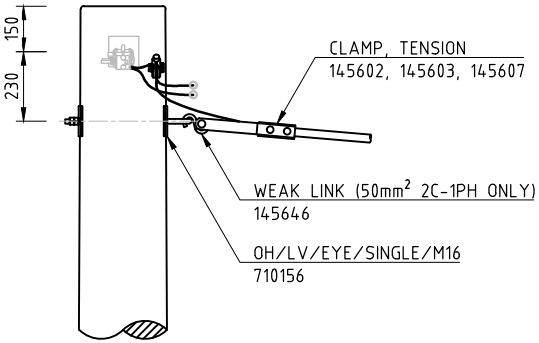

TEE OFF STRAIN

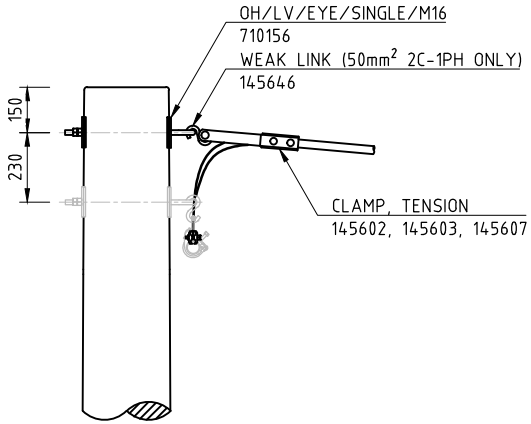

TEE OFF INTERMEDIATE

MATERIAL	SAP ASSEMBLY	710185	710186	710187	710188	710189
	DESCRIPTION	LVABC/T/1/50	LVABC/T/3/50	LVABC/T/1/95	LVABC/T/3/95	LVABC/T/3/150
710156	OH, SINGLE EYE, M16 NUT (OH/LV/EYE/SINGLE/M16)	1	1	1	1	1
145602	CLAMP, TENSION 4x50mm² ABC	-	1	-	-	-
145603	CLAMP, TENSION 2x50mm² - 2x95mm² ABC	1	-	1	-	-
145607	CLAMP, TENSION 4x95mm² - 4x150mm² ABC	-	-	-	1	1
145620	CONNECTOR, IPC LVABC 25-95mm²	3	5	3	5	-
145657	CONNECTOR, IPC LV 150mm²	-	-	-	-	5
145646	WEAK LINK, LVABC 10mmx100mm ABCWL-8	1	-	-	-	-

NOTES:

1. SEE GENERAL NOTES FOR LVABC.
2. TO MINIMISE DAMAGE FROM FALLING TREES / BRANCHES INSTALL LVABC TEE OFF ABOVE INTERMEDIATE LVABC POLE TOPS. THE SAME HEIGHT OR LOWER WILL BE ACCEPTED ON THE OPPOSITE SIDE OF THE POLE.
3. WEAK LINK TO BE USED WITH 50mm² 2C-1PH ONLY.
4. NEUTRAL SHALL BE DOUBLE IPC CONNECTION.
5. ALL DIMENSIONS ARE IN MILLIMETRES UNLESS OTHERWISE STATED.

ALTERATIONS

ORIGINAL ISSUE

REFERENCE

NEW DRAWING: SUPERSEDES
D-OHC-B007-SD-001
D-OHC-B007-SD-002

TasNetworks

DRAWN	MEGAVAR PTY LTD
DRAFTING CHECK	MEGAVAR PTY LTD
DESIGNED BY	T.KNYZHKA
CHECKED BY	B.WOLSKI
APPROVED BY	A.KETLEY
DATE APPROVED	05-11-2025

© Tasmanian Networks PTY. LTD.
trading as TasNetworks
ABN: 24 167 357 299

NO PART OF THIS DRAWING MAY BE REPRODUCED, STORED IN A RETRIEVAL SYSTEM IN ANY FORM, OR TRANSMITTED BY ANY MEANS WITHOUT THE PRIOR PERMISSION OF TASNETWORKS

TITLE
LV CONSTRUCTIONS
LVABC ASSEMBLIES
TEE OFF

SCALE NTS

A4

D - OHC - B106 - SD - 001

REVISION A

BM DWG NO D-OHC-B106-SD-001

BM REV A

EMF/PDF CREATION DATE 05/11/2025

DWG STATUS STANDARD

CAUTION : Printed document is uncontrolled.

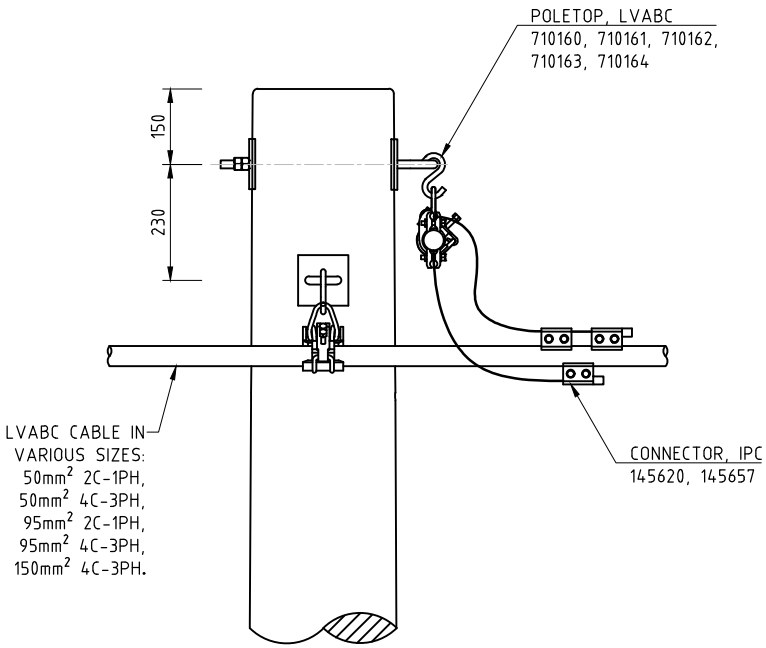

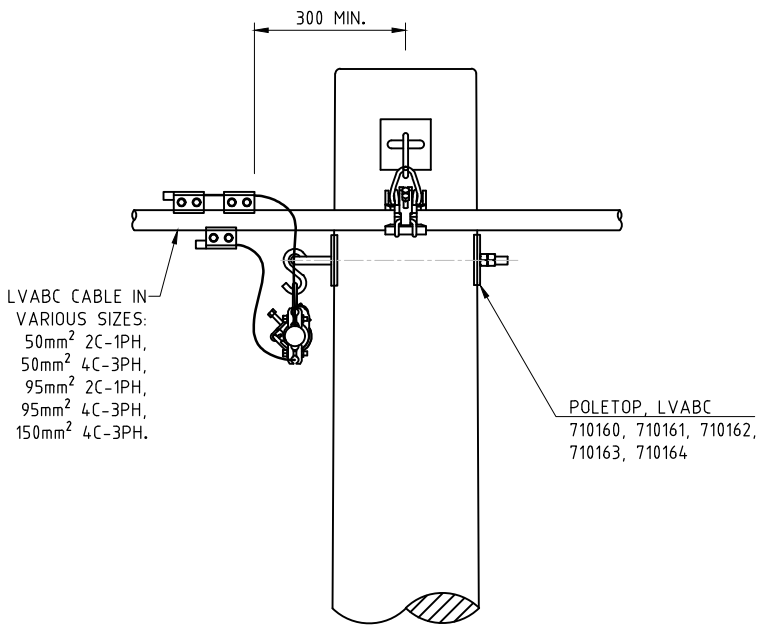

MATERIAL	DESCRIPTION					
710160	POLETOP, LVABC 50mm, INTERM, 1PH (LVABC/I/1/50)	2	-	-	-	-
710161	POLETOP, LVABC 50mm, INTERM, 3PH (LVABC/I/3/50)	-	2	-	-	-
710162	POLETOP, LVABC 95mm, INTERM, 1PH (LVABC/I/1/95)	-	-	2	-	-
710163	POLETOP, LVABC 95mm, INTERM, 3PH (LVABC/I/3/95)	-	-	-	2	-
710164	POLETOP, LVABC 150mm, INTERM, 3PH (LVABC/I/3/150)	-	-	-	-	2
145620	CONNECTOR, IPC LVABC 25-95mm2	6	10	6	10	-
145657	CONNECTOR, IPC LV 150mm2	-	-	-	-	10

NOTES:

1. SEE GENERAL NOTES FOR LVABC.
2. NEUTRAL SHALL BE DOUBLE IPC CONNECTION.
3. ALL DIMENSIONS ARE IN MILLIMETRES UNLESS OTHERWISE STATED.

ALTERATIONS

ORIGINAL ISSUE

REFERENCE

NEW DRAWING: SUPERSEDES
D-OHC-B008-SD-001
D-OHC-B008-SD-002

TasNetworks

DRAWN	MEGAVAR PTY LTD
DRAFTING CHECK	MEGAVAR PTY LTD
DESIGNED BY	T.KNYZHKA
CHECKED BY	B.WOLSKI
APPROVED BY	A.KETLEY
DATE APPROVED	05-11-2025

© Tasmanian Networks PTY. LTD.
trading as TasNetworks
ABN: 24 167 357 299

NO PART OF THIS DRAWING MAY BE REPRODUCED, STORED IN A RETRIEVAL SYSTEM IN ANY FORM, OR TRANSMITTED BY ANY MEANS WITHOUT THE PRIOR PERMISSION OF TASNETWORKS

TITLE
LV CONSTRUCTIONS
LVABC ASSEMBLIES
CROSSOVER AT POLE

SCALE NTS

A4

D - OHC - B107 - SD - 001

REVISION A

EMF/PDF CREATION DATE 05/11/2025

BM DWG NO D-OHC-B107-SD-001

BM REV A

DWG STATUS STANDARD

CAUTION : Printed document is uncontrolled.

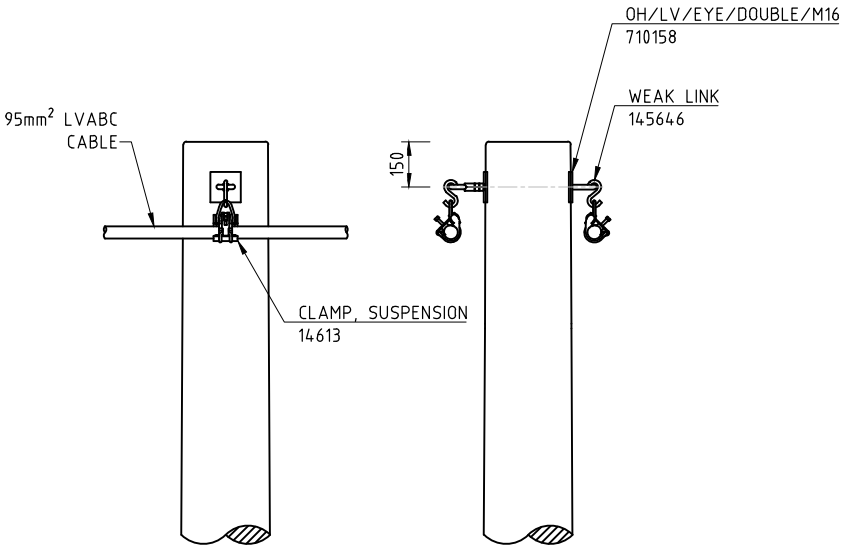

PARALLEL HORIZONTAL POLETOP
CONSTRUCTION (PREFERRED)

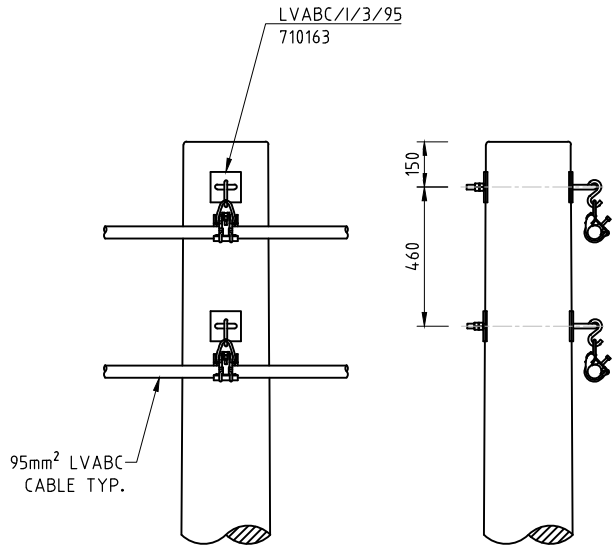

PARALLEL VERTICAL POLETOP
CONSTRUCTION

MATERIAL	DESCRIPTION	
HORIZONTAL POLE TOP CONSTRUCTION		
710158	OH, DOUBLE EYE, M16 NUT (OH/LV/EYE/DOUBLE/M16)	1
145613	CLAMP, LVABC SUSPENSION, 4x25mm² - 4x95mm²	2
145646	WEAK LINK, LVABC 10mmx100mm ABCWL-8	2
INTERMEDIATE		
710163	POLETOP, LVABC 95mm, INTERM, 3PH (LVABC/I/3/95)	2

NOTES:

1. SEE GENERAL NOTES FOR LVABC.
2. ALL DIMENSIONS ARE IN MILLIMETRES UNLESS OTHERWISE STATED.

ALTERATIONS

ORIGINAL ISSUE

REFERENCE

NEW DRAWING: SUPERSEDES
D-OHC-B010-SD-001
D-OHC-B010-SD-002

TasNetworks

DRAWN	MEGAVAR PTY LTD
DRAFTING CHECK	MEGAVAR PTY LTD
DESIGNED BY	T.KNYZHKA
CHECKED BY	B.WOLSKI
APPROVED BY	A.KETLEY
DATE APPROVED	05-11-2025

© Tasmanian Networks PTY. LTD.
trading as TasNetworks
ABN: 24 167 357 299

NO PART OF THIS DRAWING MAY BE REPRODUCED, STORED IN A RETRIEVAL SYSTEM IN ANY FORM, OR TRANSMITTED BY ANY MEANS WITHOUT THE PRIOR PERMISSION OF TASNETWORKS

TITLE
LV CONSTRUCTIONS
LVABC ASSEMBLIES
PARALLEL CIRCUITS
INTERMEDIATE

SCALE NTS

A4

D - OHC - B108 - SD - 001

REVISION A

BM DWG NO D-OHC-B108-SD-001

BM REV A

EMF/PDF CREATION DATE 05/11/2025

DWG STATUS STANDARD

CAUTION : Printed document is uncontrolled.

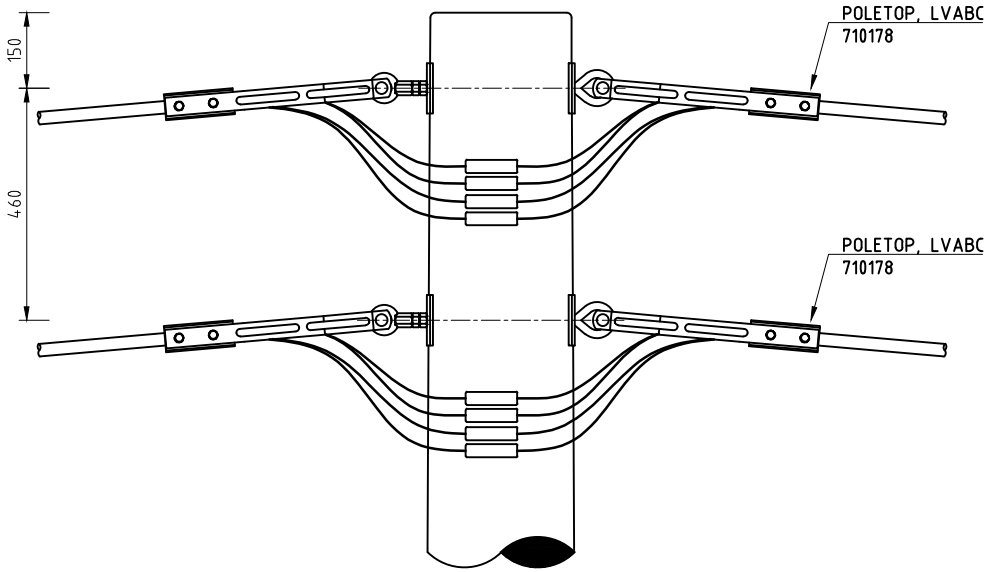

PARALLEL STRAIN

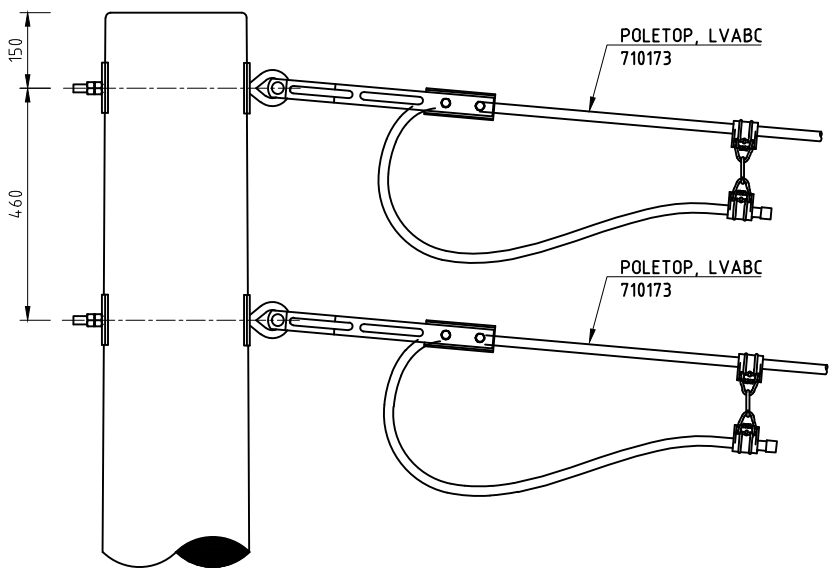

PARALLEL DEAD END

MATERIAL	DESCRIPTION	
PARALLEL STRAIN		
710178	POLETOP, LVABC 95mm, STRAIN, 3PH (LVABC/S/3/95)	2
PARALLEL DEAD END		
710173	POLETOP, LVABC 95mm, DEADEND, 3PH (LVABC/DE/3/95)	2

NOTES:

1. SEE GENERAL NOTES FOR LVABC.
2. PARALLEL LVABC TO BE BRIDGED AT TRANSFORMER FUSES, STRAIN POSITIONS, DEADENDS OR AS SPECIFIED BY DESIGN.
3. ALL DIMENSIONS ARE IN MILLIMETRES UNLESS OTHERWISE STATED.

ALTERATIONS

ORIGINAL ISSUE

REFERENCE

NEW DRAWING: SUPERSEDES
D-OHC-B011-SD-001

TasNetworks

DRAWN	MEGAVAR PTY LTD
DRAFTING CHECK	MEGAVAR PTY LTD
DESIGNED BY	T.KNYZHKA
CHECKED BY	B.WOLSKI
APPROVED BY	A.KETLEY
DATE APPROVED	05-11-2025

© Tasmanian Networks PTY. LTD.
trading as TasNetworks
ABN: 24 167 357 299

NO PART OF THIS DRAWING MAY BE REPRODUCED, STORED IN A RETRIEVAL SYSTEM IN ANY FORM, OR TRANSMITTED BY ANY MEANS WITHOUT THE PRIOR PERMISSION OF TASNETWORKS

TITLE
LV CONSTRUCTIONS
LVABC ASSEMBLIES
PARALLEL CIRCUITS
DEAD END & STRAIN

SCALE: NTS

A4

D - OHC - B108 - SD - 002

REVISION: A

BM DWG NO D-OHC-B108-SD-002

BM REV A

EMF/PDF CREATION DATE 05/11/2025

DWG STATUS STANDARD

CAUTION : Printed document is uncontrolled.

LV BARE ASSEMBLIES CONSTRUCTION CODES

FOR SUB-ASSEMBLIES:

OH / LV / XARM / STD / FRP

DENOTER

VOLTAGE

LV - LOW VOLTAGE OPEN WIRE
"--" - VOLTAGE DOESN'T APPLY

SUB ASS. TYPE

XARM - CROSSARM
P - PIN INSULATOR PIECE
DE - DEAD END INSULATOR PIECE
S - STRAIN INSULATOR PIECE
DE-P - DEAD END WITH A PIN FOR ONE PHASE
DE-1P - DEAD END WITH ONE EXTRA PIN
DE-2P - DEAD END WITH TWO EXTRA PINS
S-P - STRAIN WITH A PIN FOR ONE PHASE
S-1P - STRAIN WITH ONE EXTRA PIN
S-2P - STRAIN WITH TWO EXTRA PINS

SUB ASS. SUB TYPE

STD - STANDARD CROSSARM
LONG - LONG CROSSARM
OFFSET - OFFSET CROSSARM
BRACE - CROSSARM BRACE
1 - SINGLE PHASE
3 - THREE PHASE

ADDITIONAL INFO.

FRP - FIBREGLASS CROSSARM)

FOR ASSEMBLIES:

LV / I / 3 / FRP

VOLTAGE

LV - LOW VOLTAGE OPEN WIRE

CONSTRUCTION TYPE

I - INTERMEDIATE
DE - DEAD END
S - STRAIN
RS - RIGHT ANGLED STRAIN
T - TEE OFF
O - OFFSET
X - CROSSOVER

PHASES

1 - ONE PHASE + NEUTRAL
3 - THREE PHASES + NEUTRAL

CROSSARM TYPE

FRP - STANDARD FIBREGLASS CROSSARM
FRPLONG - LONG FIBREGLASS CROSSARM FOR GOING AROUND TX

NOTES:

1. CRIMP CONNECTIONS ARE PREFERRED FOR NON-TENSION JOINTS. IF BOLTED CONNECTORS ARE USED, THE NEUTRAL SHALL HAVE DOUBLE CLAMP CONNECTIONS TO MAINS AT TRANSFORMERS, TEE OFFS AND ANY OTHER CONNECTION WHERE CRIMP FITTINGS CANNOT BE USED.
2. ENSURE LOCK NUTS ARE INSTALLED ON ALL BOLTS PASSING THROUGH POLE WITH A MINIMUM OF ONE VISIBLE THREAD PAST THE LOCK NUT.
3. USE HEAT/COLD SHRINK TO COVER BARE LUGS OR CONDUCTORS ON 630AMP FUSE HOLDER.
4. ALL DIMENSIONS ARE IN MILLIMETRES UNLESS OTHERWISE STATED.

ALTERATIONS	REFERENCE
ORIGINAL ISSUE	NEW DRAWING

TasNetworks

DRAWN	MEGAVAR PTY LTD
DRAFTING CHECK	MEGAVAR PTY LTD
DESIGNED BY	T.JOVYZHKA
CHECKED BY	B.WOLSKI
APPROVED BY	A.KETLEY
DATE APPROVED	05-11-2025

© Tasmanian Networks PTY. LTD. trading as TasNetworks ABN: 24 167 357 299
NO PART OF THIS DRAWING MAY BE REPRODUCED, STORED IN A RETRIEVAL SYSTEM IN ANY FORM, OR TRANSMITTED BY ANY MEANS WITHOUT THE PRIOR PERMISSION OF TASNETWORKS

TITLE: LV CONSTRUCTIONS
LV BARE GENERAL NOTES & CODES

SCALE: NTS
A4

D - OHC - B109 - SD - 001

REVISION: A

BM DWG NO D-OHC-B109-SD-001

BM REV A

EMF/PDF CREATION DATE 05/11/2025

DWG STATUS STANDARD

CAUTION : Printed document is uncontrolled.

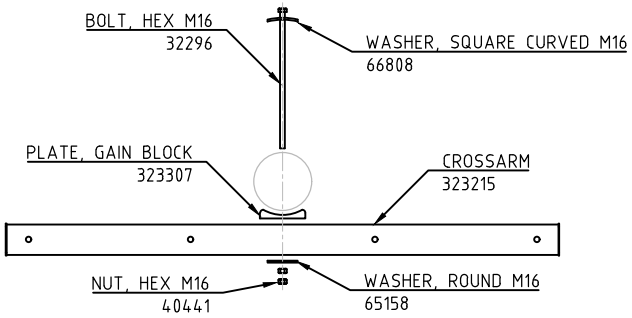

STANDARD CROSSARM
710122

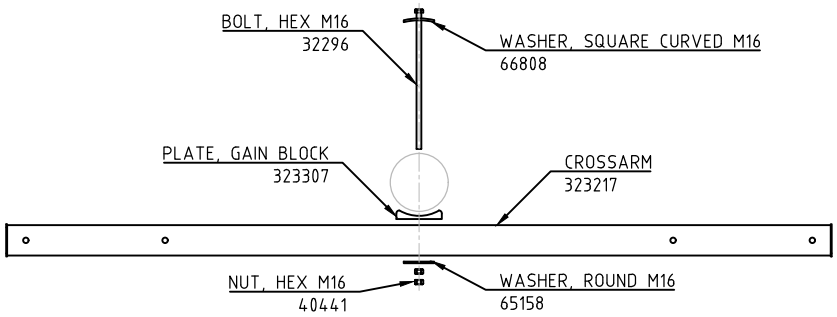

LONG CROSSARM
710123
(ONLY TO BE USED ON TRANSFORMER POLES FOR ADDITIONAL TANK CLEARANCE TO BARE MAINS)

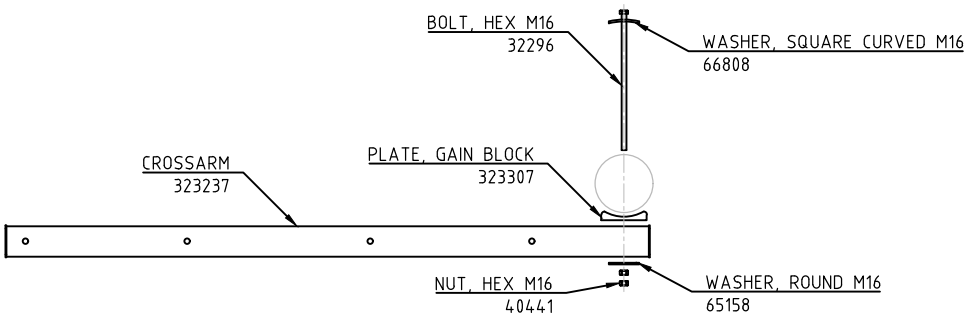

OFFSET CROSSARM
710124

MATERIAL	SAP ASSEMBLY	710122	710123	710124
	DESCRIPTION	OH/LV/XARM/STD/FRP	OH/LV/XARM/LONG/FRP	OH/LV/XARM/OFFSET/FRP
32296	BOLT, HEX HEAD M16x550mm GAL. C/W NUT	1	1	1
323307	PLATE, GAIN BLOCK, 125mm CROSSARM	1	1	1
323215	CROSSARM, FIBREGLASS, 100x100x1830mm LONG	1	-	-
323217	CROSSARM, FIBREGLASS, 100x100x2750mm LONG	-	1	-
323237	CROSSARM, FIBREGLASS, 100x100x2130mm OFFSET	-	-	1
40441	NUT, HEX M16 THREAD GALANISED STEEL	1	1	1
65158	WASHER,FLAT ROUND M16 X 50MM GAL	1	1	1
66808	WASHER, CURVED SQUARE M16 100MM	1	1	1

NOTES:

1. SEE GENERAL NOTES FOR BARE LV.
2. ALL DIMENSIONS ARE IN MILLIMETRES UNLESS OTHERWISE STATED.

ALTERATIONS
ORIGINAL ISSUE

REFERENCE
NEW DRAWING

TasNetworks

DRAWN	MEGAVAR PTY LTD
DRAFTING CHECK	MEGAVAR PTY LTD
DESIGNED BY	T.KRYZHKA
CHECKED BY	B.WOLSKI
APPROVED BY	A.KETLEY
DATE APPROVED	05-11-2025

© Tasmanian Networks PTY. LTD. trading as TasNetworks ABN: 24 167 357 299
NO PART OF THIS DRAWING MAY BE REPRODUCED, STORED IN A RETRIEVAL SYSTEM IN ANY FORM, OR TRANSMITTED BY ANY MEANS WITHOUT THE PRIOR PERMISSION OF TASNETWORKS

TITLE
LV CONSTRUCTIONS
LV BARE SUB-ASSEMBLIES
CROSSARMS

SCALE NTS
A4

D - OHC - B110 - SD - 001

REVISION A

BM DWG NO D-OHC-B110-SD-001
BM REV A

EMF/PDF CREATION DATE 05/11/2025

DWG STATUS STANDARD

CAUTION : Printed document is uncontrolled.

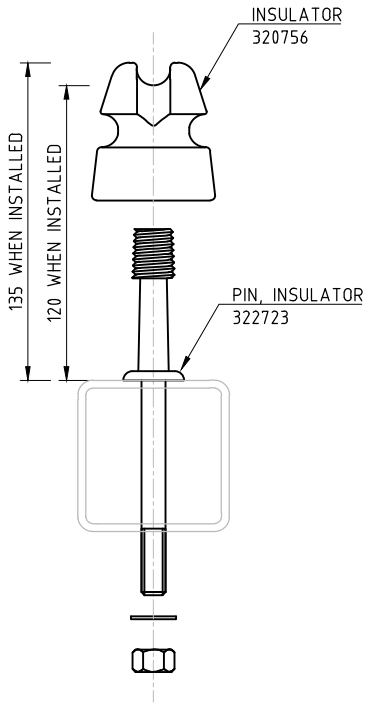

PIN INSULATOR
710125

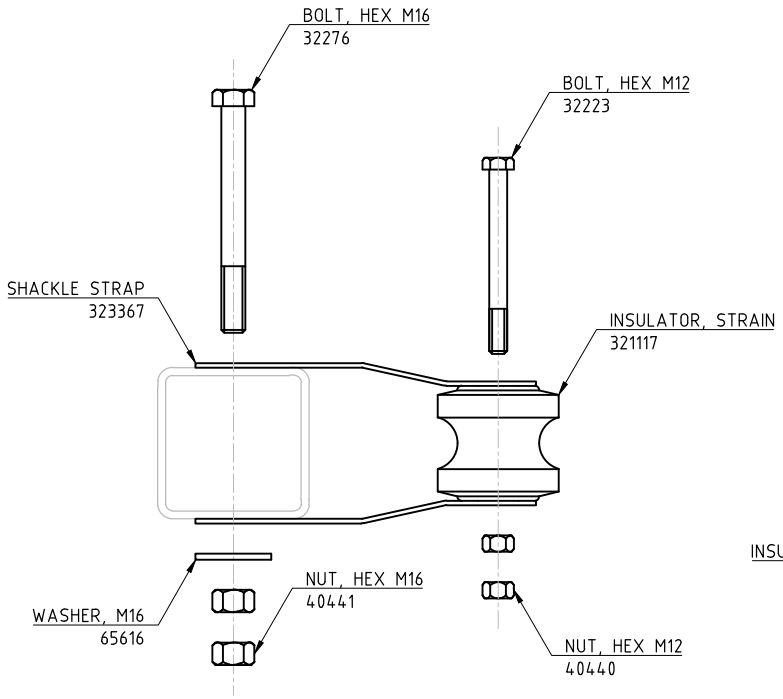

DEAD END & TEE OFF INSULATOR
710126

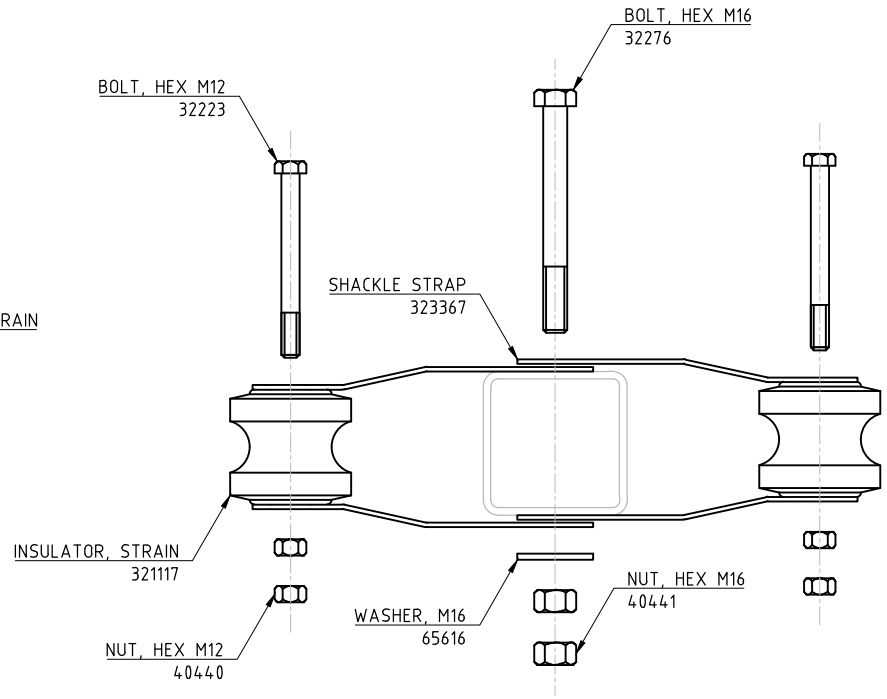

STRAIN INSULATOR
710127

MATERIAL	SAP ASSEMBLY	710125
	DESCRIPTION	OH/LV/P/FRP
322723	PIN, INSULATOR 16mm DIA x LV GAL. STEEL	1
320756	INSULATOR, PIN 660V LVLP PORCELAIN	1

MATERIAL	SAP ASSEMBLY	710126	710127
	DESCRIPTION	OH/LV/DE/FRP	OH/LV/S/FRP
321117	INSULATOR, STRAIN 80mm SHLV2 PORCELAIN	1	2
32223	BOLT, HEX HEAD M12x120mm GAL. C/W NUT	1	2
32276	BOLT, HEX HEAD M16x150mm GAL. C/W NUT	1	1
65616	WASHER, FLAT ROUND M16x30mm GAL.	1	1
323367	SHACKLE, STRAP, LV, 222x40x3mm GAL.	2	4
40440	NUT, HEX M12 THREAD GAL. STEEL	1	2
40441	NUT, HEX M16 THREAD GAL. STEEL	1	1

NOTES:

1. SEE GENERAL NOTES FOR BARE LV.
2. ALL DIMENSIONS ARE IN MILLIMETRES UNLESS OTHERWISE STATED.

ALTERATIONS

ORIGINAL ISSUE

REFERENCE

NEW DRAWING

TasNetworks

DRAWN	MEGAVAR PTY LTD
DRAFTING CHECK	MEGAVAR PTY LTD
DESIGNED BY	T.KNYZHKA
CHECKED BY	B.WOLSKI
APPROVED BY	A.KETLEY
DATE APPROVED	05-11-2025

© Tasmanian Networks PTY. LTD. trading as TasNetworks ABN: 24 167 357 299

NO PART OF THIS DRAWING MAY BE REPRODUCED, STORED IN A RETRIEVAL SYSTEM IN ANY FORM, OR TRANSMITTED BY ANY MEANS WITHOUT THE PRIOR PERMISSION OF TASNETWORKS

TITLE

LV CONSTRUCTIONS
LV BARE SUB-ASSEMBLIES
INSULATORS

SCALE NTS

A4

D - OHC - B110 - SD - 002

REVISION A

EMF/PDF CREATION DATE 05/11/2025

BM DWG NO D-OHC-B110-SD-002

BM REV A

DWG STATUS STANDARD

CAUTION : Printed document is uncontrolled.

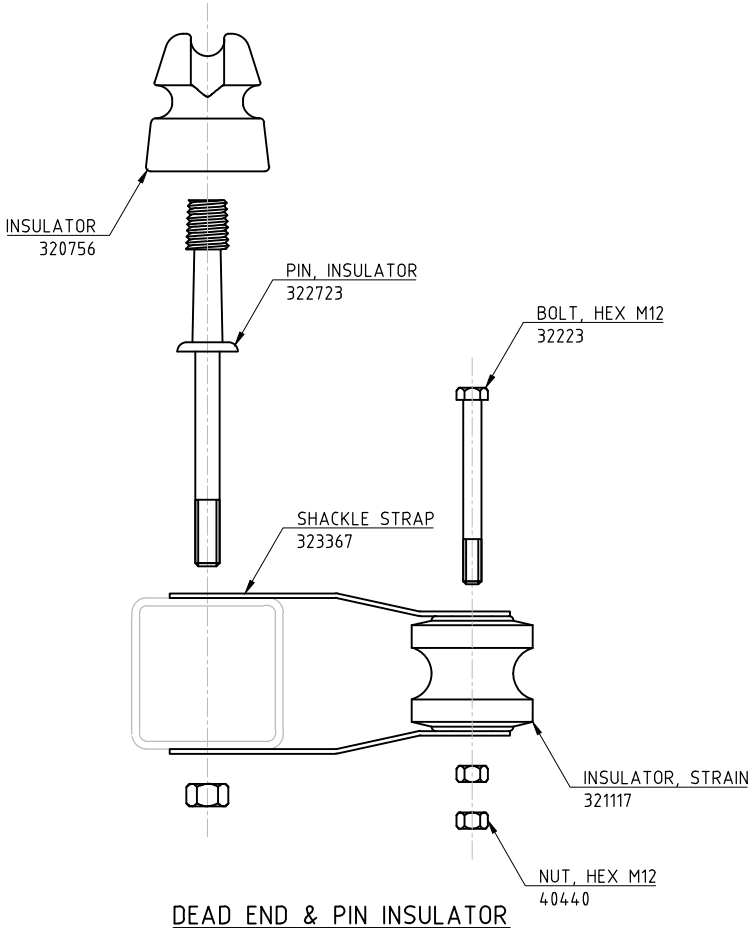

DEAD END & PIN INSULATOR
710128

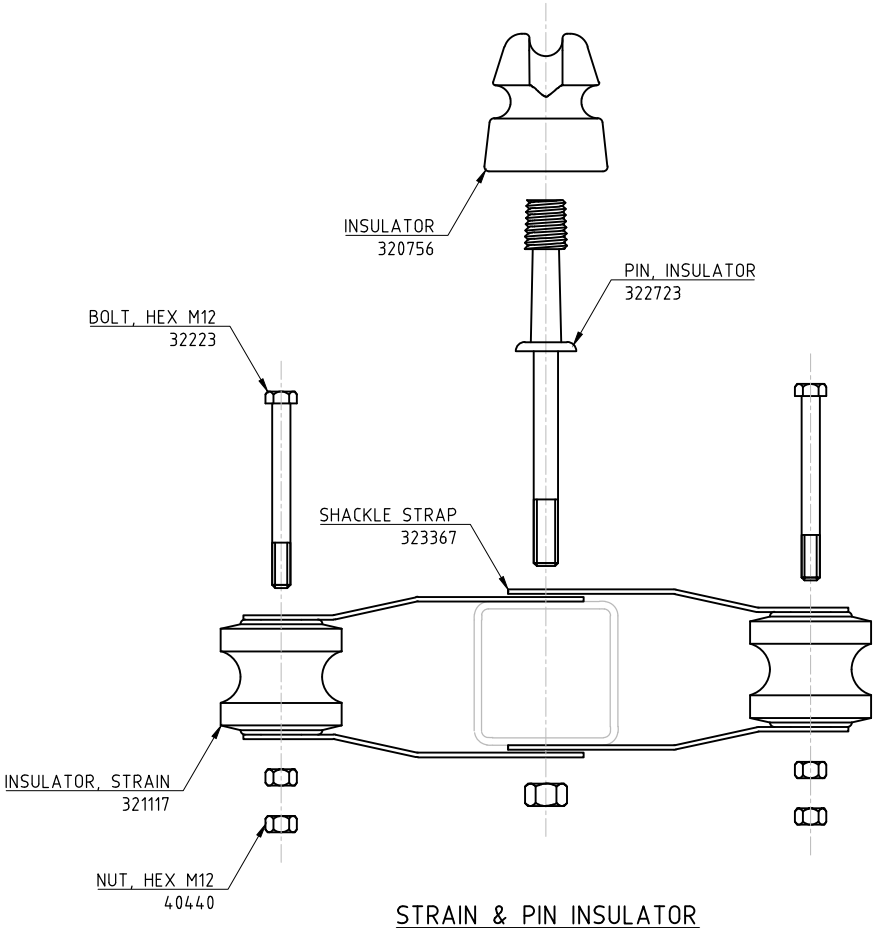

STRAIN & PIN INSULATOR
710129

MATERIAL	SAP ASSEMBLY	710128	710129
	DESCRIPTION	OH/LV/DE-P/FRP	OH/LV/S-P/FRP
322723	PIN, INSULATOR 16mm DIA x LV GAL. STEEL	1	1
320756	INSULATOR, PIN 660V LVLP PORCELAIN	1	1
321117	INSULATOR, STRAIN 80mm SHLV2 PORCELAIN	1	2
32223	BOLT, HEX HEAD M12x120mm GAL. C/W NUT	1	2
323367	SHACKLE, STRAP, LV, 222x40x3mm GAL.	2	4
40440	NUT, HEX M12 THREAD GAL. STEEL	1	2

NOTES:

1. SEE GENERAL NOTES FOR BARE LV.
2. ALL DIMENSIONS ARE IN MILLIMETRES UNLESS OTHERWISE STATED.

ALTERATIONS

ORIGINAL ISSUE

REFERENCE

NEW DRAWING

TasNetworks

DRAWN	MEGAVAR PTY LTD
DRAFTING CHECK	MEGAVAR PTY LTD
DESIGNED BY	T.KNYZHKA
CHECKED BY	B.WOLSKI
APPROVED BY	A.KETLEY
DATE APPROVED	05-11-2025

© Tasmanian Networks PTY. LTD.
trading as TasNetworks
ABN: 24 167 357 299

NO PART OF THIS DRAWING MAY BE REPRODUCED, STORED IN A RETRIEVAL SYSTEM IN ANY FORM, OR TRANSMITTED BY ANY MEANS WITHOUT THE PRIOR PERMISSION OF TASNETWORKS

TITLE
LV CONSTRUCTIONS
LV BARE SUB-ASSEMBLIES
STRAIN/DEAD END & PIN INSULATORS

SCALE NTS

A4

D - OHC - B110 - SD - 003

REVISION A

EMF/PDF CREATION DATE 05/11/2025

BM DWG NO D-OHC-B110-SD-003

BM REV A

DWG STATUS STANDARD

CAUTION : Printed document is uncontrolled.

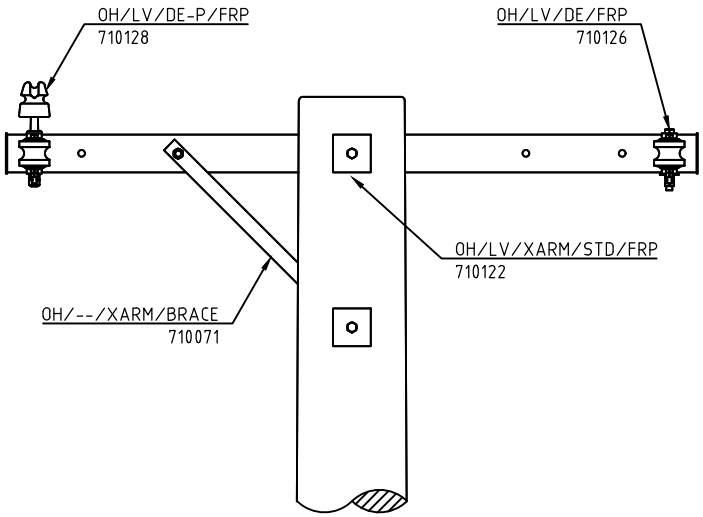

DEAD END, 1 PHASE
710130

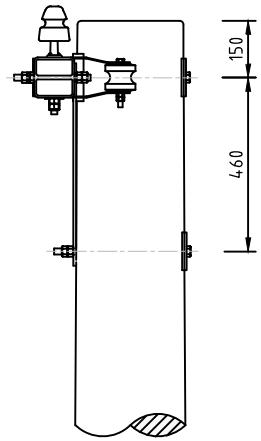

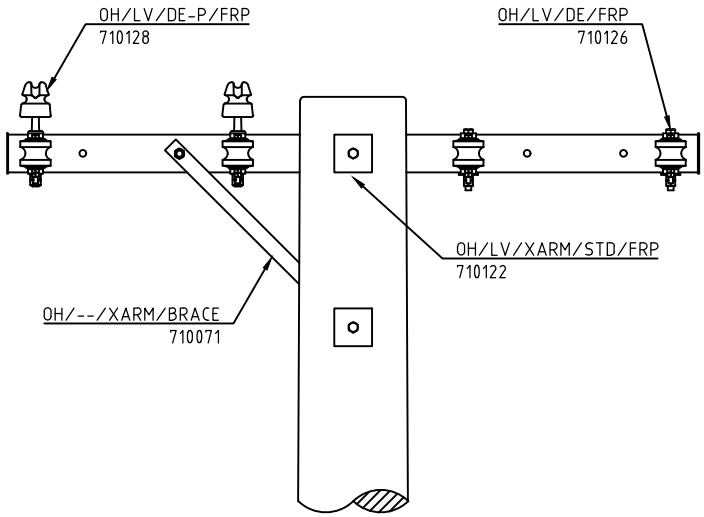

DEAD END, 3 PHASE
710131

MATERIAL	SAP ASSEMBLY	710130	710131
	DESCRIPTION	OH/LV/DE-1P/1	OH/LV/DE-2P/3
710128	OH, LV, INSULATOR, DEAD END TYPE WITH PIN (OH/LV/DE-P/FRP)	1	2
710122	OH, LV, STANDARD FIBREGLASS CROSSARM (OH/LV/XARM/STD/FRP)	1	1
710071	OH, XARM BRACE, FRP (OH/--/XARM/BRACE)	1	1
710126	OH, LV, INSULATOR, DEAD END TYPE (OH/LV/DE/FRP)	1	2

NOTES:

1. SEE GENERAL NOTES FOR BARE LV.
2. SUBASSEMBLY FOR USE WITH OTHER ASSEMBLIES INCLUDING RIGHT ANGLE STRAINS.
3. ALL DIMENSIONS ARE IN MILLIMETRES UNLESS OTHERWISE STATED.

ALTERATIONS

ORIGINAL ISSUE

REFERENCE

NEW DRAWING

TasNetworks

DRAWN	MEGAVAR PTY LTD
DRAFTING CHECK	MEGAVAR PTY LTD
DESIGNED BY	T.JOVYZHKA
CHECKED BY	B.WOLSKI
APPROVED BY	A.KETLEY
DATE APPROVED	05-11-2025

© Tasmanian Networks PTY. LTD. trading as TasNetworks ABN: 24 167 357 299

NO PART OF THIS DRAWING MAY BE REPRODUCED, STORED IN A RETRIEVAL SYSTEM IN ANY FORM, OR TRANSMITTED BY ANY MEANS WITHOUT THE PRIOR PERMISSION OF TASNETWORKS

TITLE
LV CONSTRUCTIONS
LV BARE SUB-ASSEMBLIES
DEAD END & EXTRA PIN INSULATORS

SCALE NTS

A4

D - OHC - B110 - SD - 004

REVISION A

BM DWG NO D-OHC-B110-SD-004

BM REV A

EMF/PDF CREATION DATE 05/11/2025

DWG STATUS STANDARD

CAUTION : Printed document is uncontrolled.

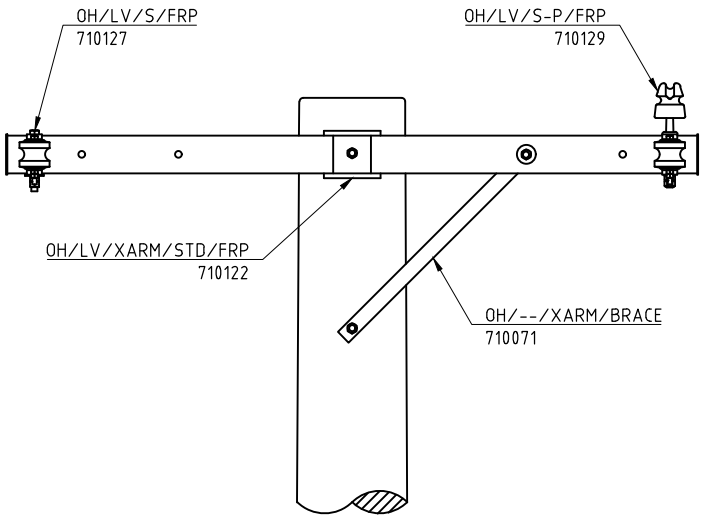

STRAIN, 1 PHASE
710132

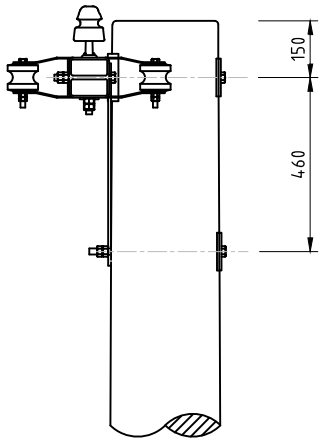

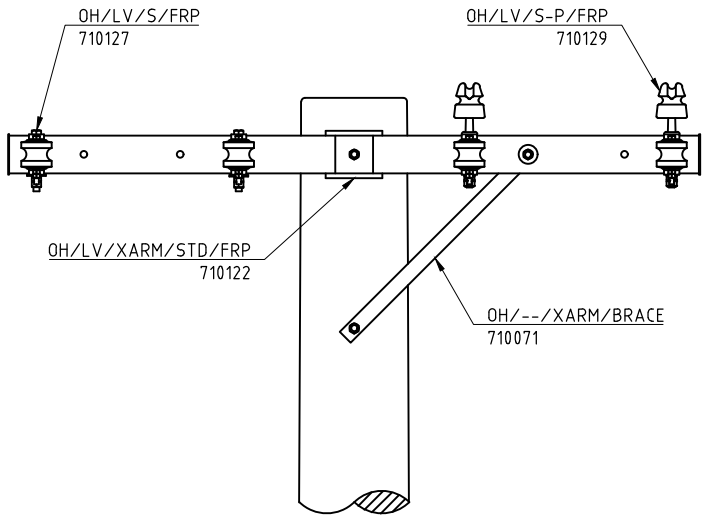

STRAIN, 3 PHASE
710133

MATERIAL	SAP ASSEMBLY	710132	710133
	DESCRIPTION	OH/LV/S-1P/1	OH/LV/S-2P/3
710122	OH, LV, STANDARD FIBREGLASS CROSSARM (OH/LV/XARM/STD/FRP)	1	1
710071	OH, XARM BRACE, FRP (OH/--/XARM/BRACE)	1	1
710127	OH, LV, INSULATOR, STRAIN TYPE (OH/LV/S/FRP)	1	2
710129	OH, LV, INSULATOR, STRAIN TYPE WITH PIN (OH/LV/S-P/FRP)	1	2

NOTES:

1. SEE GENERAL NOTES FOR BARE LV.
2. SUBASSEMBLY FOR USE WITH OTHER ASSEMBLIES INCLUDING RIGHT ANGLE STRAINS.
3. ALL DIMENSIONS ARE IN MILLIMETRES UNLESS OTHERWISE STATED.

ALTERATIONS

ORIGINAL ISSUE

REFERENCE

NEW DRAWING

TasNetworks

DRAWN	MEGAVAR PTY LTD
DRAFTING CHECK	MEGAVAR PTY LTD
DESIGNED BY	T.KNYZHKA
CHECKED BY	B.WOLSKI
APPROVED BY	A.KETLEY
DATE APPROVED	05-11-2025

© Tasmanian Networks PTY. LTD.
trading as TasNetworks
ABN: 24 167 357 299

NO PART OF THIS DRAWING MAY BE REPRODUCED, STORED IN A RETRIEVAL SYSTEM IN ANY FORM, OR TRANSMITTED BY ANY MEANS WITHOUT THE PRIOR PERMISSION OF TASNETWORKS

TITLE
LV CONSTRUCTIONS
LV BARE SUB-ASSEMBLIES
STRAIN & EXTRA PIN INSULATORS

SCALE NTS

A4

D - OHC - B110 - SD - 005

REVISION A

EMF/PDF CREATION DATE 05/11/2025

BM DWG NO D-OHC-B110-SD-005

BM REV A

DWG STATUS STANDARD

CAUTION : Printed document is uncontrolled.

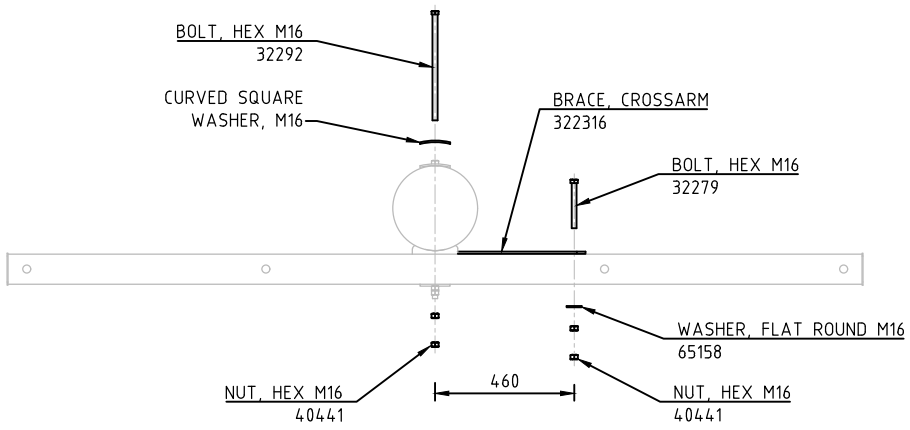

CROSSARM BRACE
710071

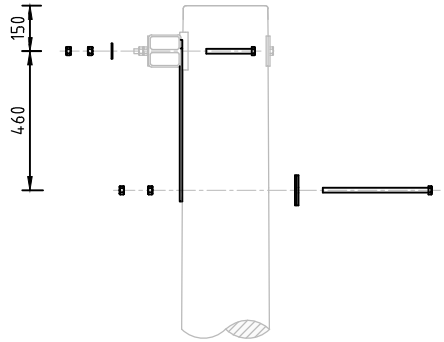

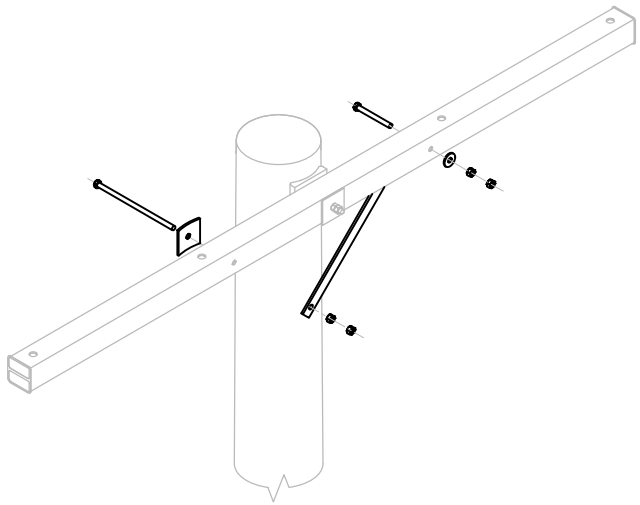

NOTES:

1. SEE GENERAL NOTES FOR BARE LV.
2. BRACE TO BE FITTED TO SIDE OF CROSSARM OPPOSITE THE RESULTANT FORCE SO IT IS UNDER TENSION.
3. ALL DIMENSIONS ARE IN MILLIMETRES UNLESS OTHERWISE STATED.

MATERIAL	DESCRIPTION	710071
		OH/--/XARM/BRACE
323316	BRACE, CROSSARM 40x716x8mm THICK GAL.	1
32292	BOLT, HEX HEAD M16x450mm GAL. C/W NUT	1
32279	BOLT, HEX HEAD M16x180mm GAL. C/W NUT	1
40441	NUT, HEX M16 THREAD GALVANISED STEEL	2
65158	WASHER, FLAT ROUND M16x50mm GAL.	1
66806	WASHER, CURVED 75 X 75MM TO FIT M16	1

ALTERATIONS

ORIGINAL ISSUE

REFERENCE

TasNetworks

DRAWN	MEGAVAR PTY LTD
DRAFTING CHECK	MEGAVAR PTY LTD
DESIGNED BY	T.JOVYZHKA
CHECKED BY	B.WOLSKI
APPROVED BY	A.KETLEY
DATE APPROVED	14-11-2025

© Tasmanian Networks PTY. LTD. trading as TasNetworks
ABN: 24 167 357 299
NO PART OF THIS DRAWING MAY BE REPRODUCED, STORED IN A RETRIEVAL SYSTEM IN ANY FORM, OR TRANSMITTED BY ANY MEANS WITHOUT THE PRIOR PERMISSION OF TASNETWORKS

TITLE
LV CONSTRUCTIONS
LV BARE SUB-ASSEMBLIES
CROSSARM BRACE

SCALE NTS

A4

D - OHC - B110 - SD - 006

REVISION A

BM DWG NO D-OHC-B110-SD-006

BM REV A

EMF/PDF CREATION DATE 05/11/2025

DWG STATUS STANDARD

CAUTION : Printed document is uncontrolled.

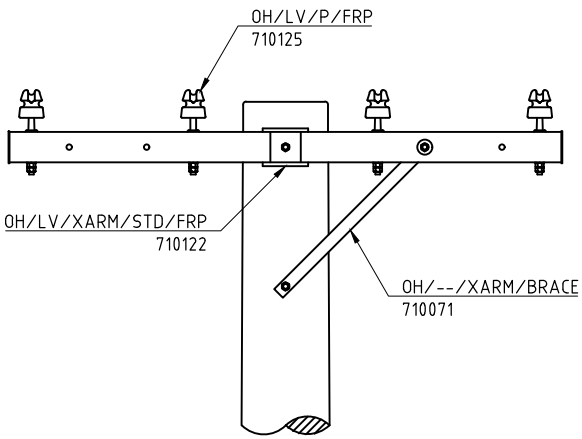

INTERMEDIATE STANDARD
710135

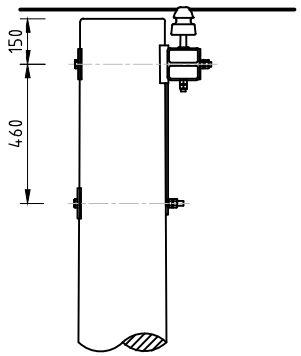

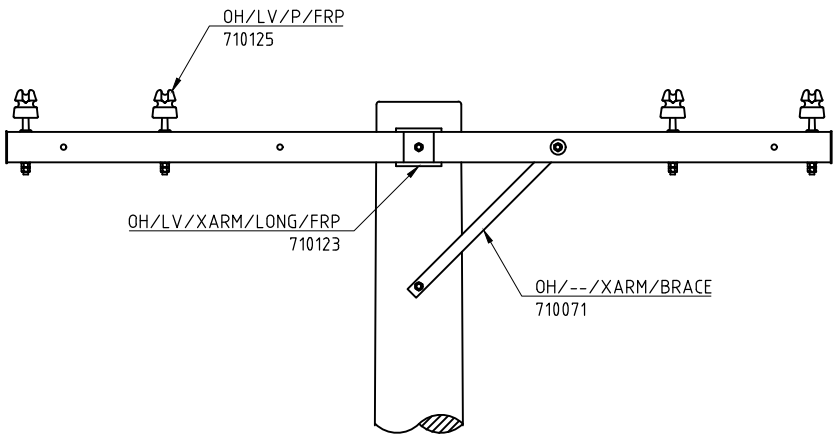

INTERMEDIATE LONG
(ONLY TO BE USED ON TRANSFORMER POLES FOR ADDITIONAL TANK CLEARANCE TO BARE MAINS)

NOTES:

1. SEE GENERAL NOTES FOR BARE LV.
2. MAXIMUM ANGLES FOR INTERMEDIATE CONSTRUCTION REFER TO "DISTRIBUTION OVERHEAD STANDARD - POLE TOP CONSTRUCTIONS".
3. ALL DIMENSIONS ARE IN MILLIMETRES UNLESS OTHERWISE STATED.

MATERIAL	SAP ASSEMBLY	710134	710135	710137
	DESCRIPTION	LV/I/1/FRP	LV/I/3/FRP	LV/I/3/FRPLONG
710122	OH, LV, STANDARD FIBREGLASS CROSSARM (OH/LV/XARM/STD/FRP)	1	1	-
710071	OH, XARM BRACE, FRP (OH/--/XARM/BRACE)	1	1	1
710125	OH, LV, INSULATOR, PIN TYPE (OH/LV/P/FRP)	2	4	4
710123	OH, LV, LONG FIBREGLASS CROSSARM (OH/LV/XARM/LONG/FRP)	-	-	1

ALTERATIONS
ORIGINAL ISSUE

REFERENCE
NEW DRAWING: SUPERSEDES
D-OHC-B023-SD-001
D-OHC-B023-SD-002

TasNetworks

DRAWN	MEGAVAR PTY LTD
DRAFTING CHECK	MEGAVAR PTY LTD
DESIGNED BY	T.KNYZHKA
CHECKED BY	B.WOLSKI
APPROVED BY	A.KETLEY
DATE APPROVED	05-11-2025

© Tasmanian Networks PTY. LTD.
trading as TasNetworks
ABN: 24 167 357 299
NO PART OF THIS DRAWING MAY BE REPRODUCED, STORED IN A RETRIEVAL SYSTEM IN ANY FORM, OR TRANSMITTED BY ANY MEANS WITHOUT THE PRIOR PERMISSION OF TASNETWORKS

TITLE
LV CONSTRUCTIONS
LV BARE ASSEMBLIES
INTERMEDIATE

SCALE NTS
A4
REVISION A

D - OHC - B111 - SD - 001

EMF/PDF CREATION DATE 05/11/2025

BM DWG NO D-OHC-B111-SD-001
BM REV A

DWG STATUS STANDARD

CAUTION : Printed document is uncontrolled.

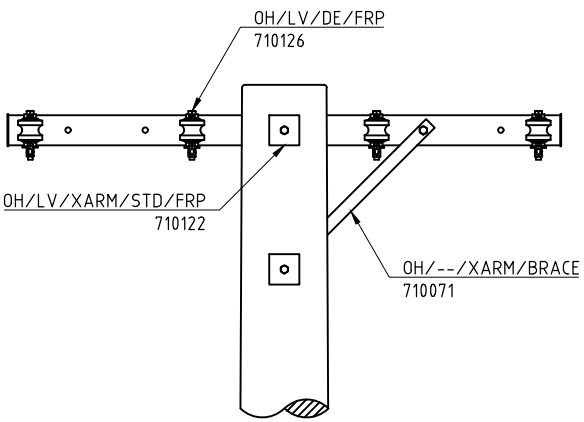

DEAD END, STANDARD
710139

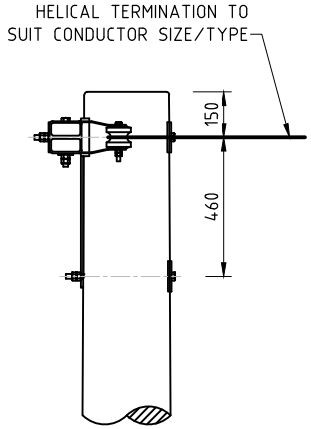

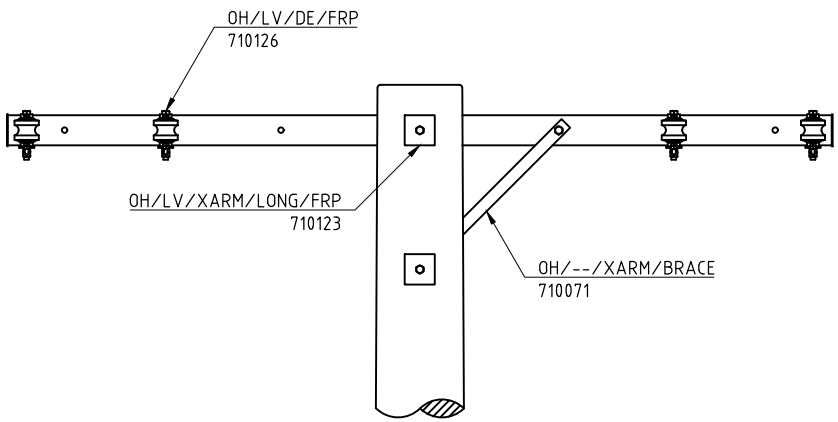

DEAD END, LONG
(ONLY TO BE USED ON TRANSFORMER POLES FOR
ADDITIONAL TANK CLEARANCE TO BARE MAINS)

NOTES:

1. SEE GENERAL NOTES FOR BARE LV.
2. ALL DIMENSIONS ARE IN MILLIMETRES UNLESS OTHERWISE STATED.

MATERIAL	SAP ASSEMBLY	710138	710139	710141
	DESCRIPTION	LV/DE/1/FRP	LV/DE/3/FRP	LV/DE/3/FRPLONG
710122	OH, LV, STANDARD FIBREGLASS CROSSARM (OH/LV/XARM/STD/FRP)	1	1	-
710071	OH, XARM BRACE, FRP (OH/--/XARM/BRACE)	1	1	1
710126	OH, LV, INSULATOR, DEAD END TYPE (OH/LV/DE/FRP)	2	4	4
710123	OH, LV, LONG FIBREGLASS CROSSARM (OH/LV/XARM/LONG/FRP)	-	-	1

ALTERATIONS

ORIGINAL ISSUE

REFERENCE

NEW DRAWING: SUPERSEDES
D-OHC-B025-SD-001
D-OHC-B025-SD-002

TasNetworks

DRAWN	MEGAVAR PTY LTD
DRAFTING CHECK	MEGAVAR PTY LTD
DESIGNED BY	T.KNYZHKA
CHECKED BY	B.WOLSKI
APPROVED BY	A.KETLEY
DATE APPROVED	05-11-2025

© Tasmanian Networks PTY. LTD.
trading as TasNetworks
ABN: 24 167 357 299

NO PART OF THIS DRAWING MAY BE REPRODUCED, STORED IN A RETRIEVAL SYSTEM IN ANY FORM, OR TRANSMITTED BY ANY MEANS WITHOUT THE PRIOR PERMISSION OF TASNETWORKS

TITLE
LV CONSTRUCTIONS
LV BARE ASSEMBLIES
DEAD END

SCALE NTS

A4

D - OHC - B112 - SD - 001

REVISION A

EMF/PDF CREATION DATE 05/11/2025

BM DWG NO D-OHC-B112-SD-001

BM REV A

DWG STATUS STANDARD

CAUTION : Printed document is uncontrolled.

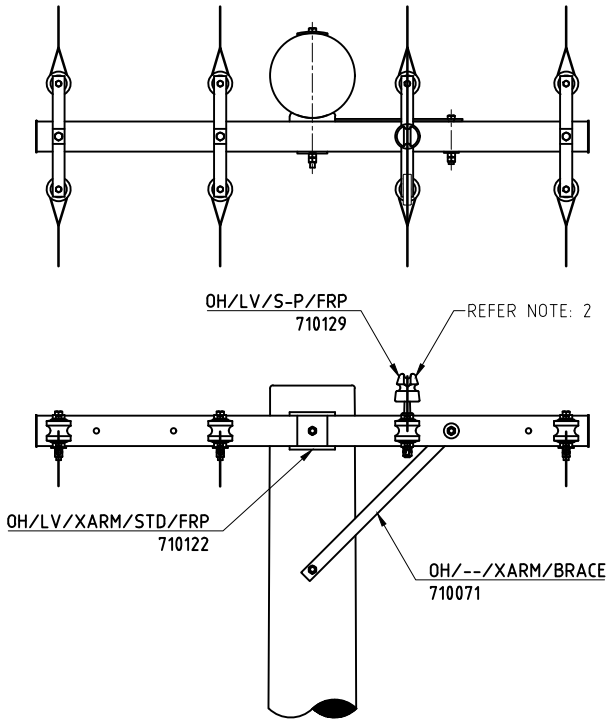

STRAIN, STANDARD
710143

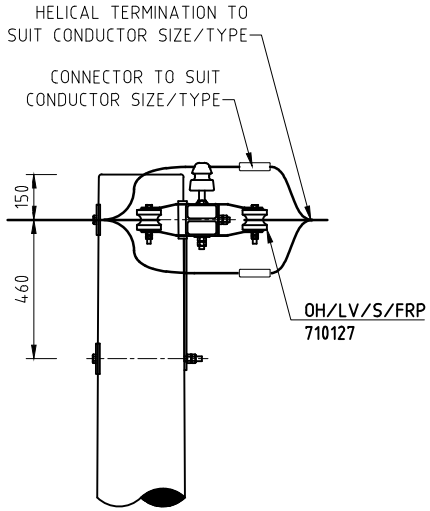

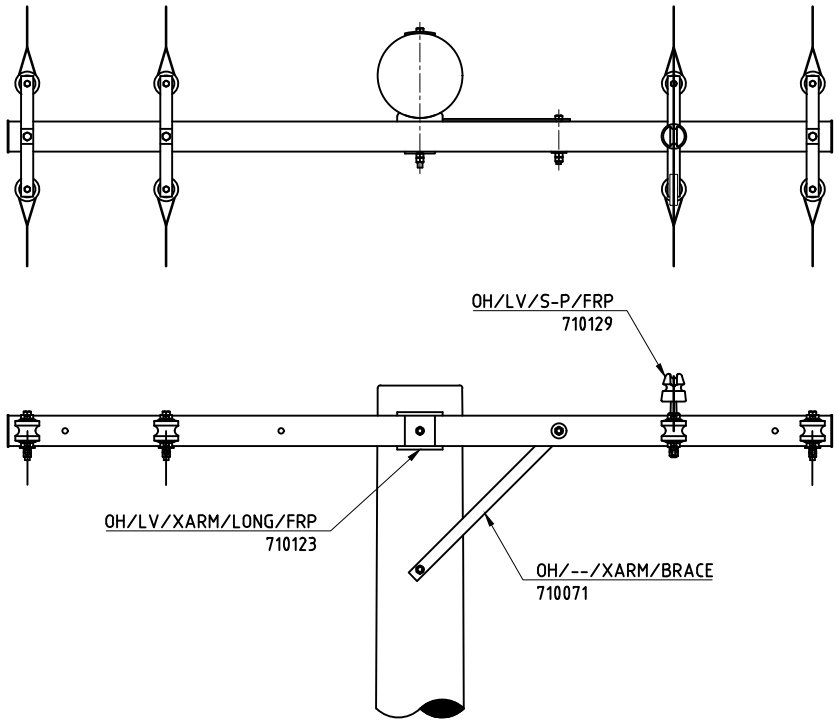

STRAIN, LONG
(ONLY TO BE USED ON TRANSFORMER POLES FOR
ADDITIONAL TANK CLEARANCE TO BARE MAINS)

NOTES:

1. SEE GENERAL NOTES FOR BARE LV.
2. INSULATOR IS REQUIRED TO MAINTAIN CLEARANCE TO BRACE.
3. MAXIMUM ANGLES FOR STRAIN CONSTRUCTION REFER TO "DISTRIBUTION OVERHEAD STANDARD - POLE TOP CONSTRUCTIONS".
4. IF BOLTED CONNECTIONS ARE USED NEUTRAL SHALL BE DOUBLE CLAMPS.
5. ALL DIMENSIONS ARE IN MILLIMETRES UNLESS OTHERWISE STATED.

MATERIAL	SAP ASSEMBLY	710142	710143	710145
	DESCRIPTION	LV/S/1/FRP	LV/S/3/FRP	LV/S/3/FRPLONG
710122	OH, LV, STANDARD FIBREGLASS CROSSARM (OH/LV/XARM/STD/FRP)	1	1	-
710071	OH, XARM BRACE, FRP (OH/--/XARM/BRACE)	1	1	1
710127	OH, LV, INSULATOR, STRAIN TYPE (OH/LV/S/FRP)	2	3	3
710123	OH, LV, LONG FIBREGLASS CROSSARM (OH/LV/XARM/LONG/FRP)	-	-	1
710129	OH, LV, INSULATOR, STRAIN TYPE WITH PIN (OH/LV/S-P/FRP)	-	1	1

ALTERATIONS

ORIGINAL ISSUE

REFERENCE

NEW DRAWING: SUPERSEDES
D-OHC-B026-SD-001
D-OHC-B026-SD-002

TasNetworks

DRAWN	MEGAVAR PTY LTD
DRAFTING CHECK	MEGAVAR PTY LTD
DESIGNED BY	T.KNYZHKA
CHECKED BY	B.WOLSKI
APPROVED BY	A.KETLEY
DATE APPROVED	05-11-2025

© Tasmanian Networks PTY. LTD.
trading as TasNetworks
ABN: 24 167 357 299

NO PART OF THIS DRAWING MAY BE REPRODUCED, STORED IN A RETRIEVAL SYSTEM IN ANY FORM, OR TRANSMITTED BY ANY MEANS WITHOUT THE PRIOR PERMISSION OF TASNETWORKS

TITLE
LV CONSTRUCTIONS
LV BARE ASSEMBLIES
STRAIN

SCALE NTS

A4

D - OHC - B113 - SD - 001

REVISION A

BM DWG NO D-OHC-B113-SD-001

BM REV A

EMF/PDF CREATION DATE 05/11/2025

DWG STATUS STANDARD

CAUTION : Printed document is uncontrolled.

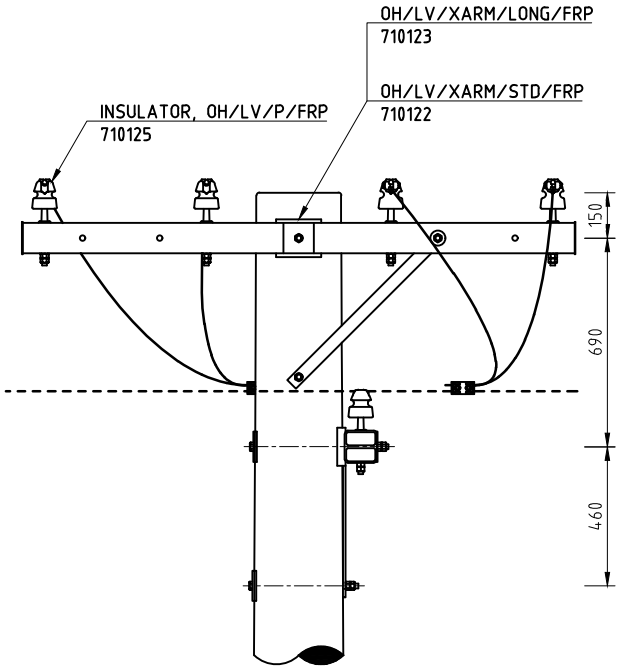

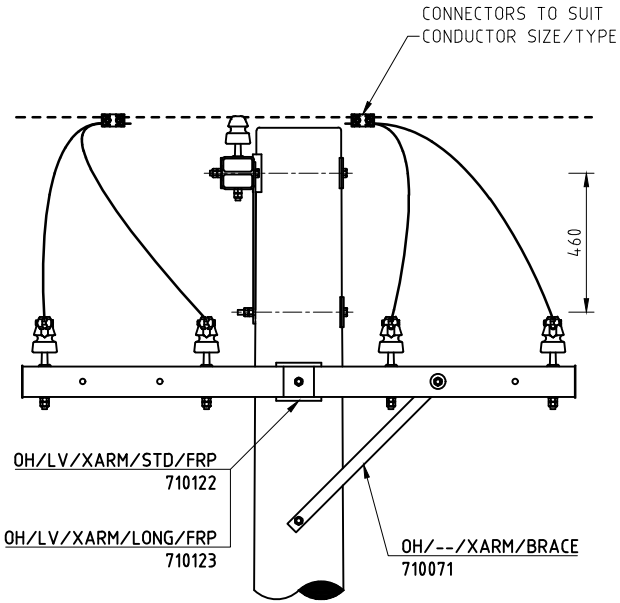

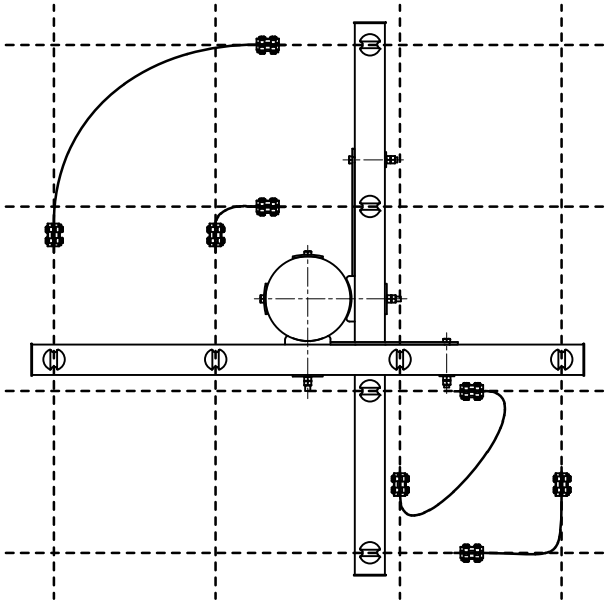

PLAN VIEW

NOTES:

1. SEE GENERAL NOTES FOR BARE LV.
2. NEUTRAL SHALL BE DOUBLE CLAMP CONNECTIONS.
3. ALL DIMENSIONS ARE IN MILLIMETRES UNLESS OTHERWISE STATED.

MATERIAL	DESCRIPTION		
710122	OH, LV, STANDARD FIBREGLASS CROSSARM (OH/LV/XARM/STD/FRP)	2	2
710071	OH, XARM BRACE, FRP (OH/--/XARM/BRACE)	2	2
710125	OH, LV, INSULATOR, PIN TYPE (OH/LV/P/FRP)	4	8

ALTERATIONS

ORIGINAL ISSUE

REFERENCE

NEW DRAWING SUPERCEDES:
D-OHC-B028-SD-001
D-OHC-B028-SD-002

TasNetworks

DRAWN	MEGAVAR PTY LTD
DRAFTING CHECK	MEGAVAR PTY LTD
DESIGNED BY	T.KNYZHKA
CHECKED BY	B.WOLSKI
APPROVED BY	A.KETLEY
DATE APPROVED	05-11-2025

© Tasmanian Networks PTY. LTD.
trading as TasNetworks
ABN: 24 167 357 299

NO PART OF THIS DRAWING MAY BE REPRODUCED, STORED IN A RETRIEVAL SYSTEM IN ANY FORM, OR TRANSMITTED BY ANY MEANS WITHOUT THE PRIOR PERMISSION OF TASNETWORKS

TITLE
LV CONSTRUCTIONS
LV BARE ASSEMBLIES
INTERMEDIATE CROSSOVER

SCALE NTS

A4

D - OHC - B114 - SD - 001

REVISION A

EMF/PDF CREATION DATE 05/11/2025

BM DWG NO D-OHC-B114-SD-001

BM REV A

DWG STATUS STANDARD

CAUTION : Printed document is uncontrolled.

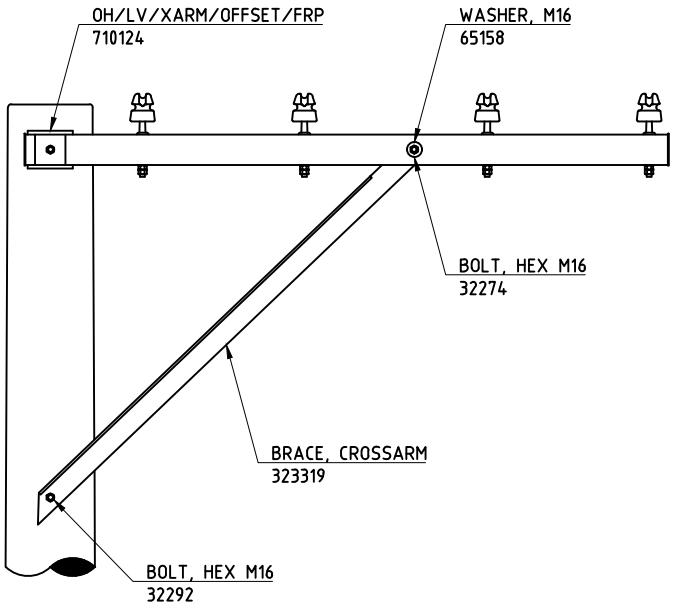

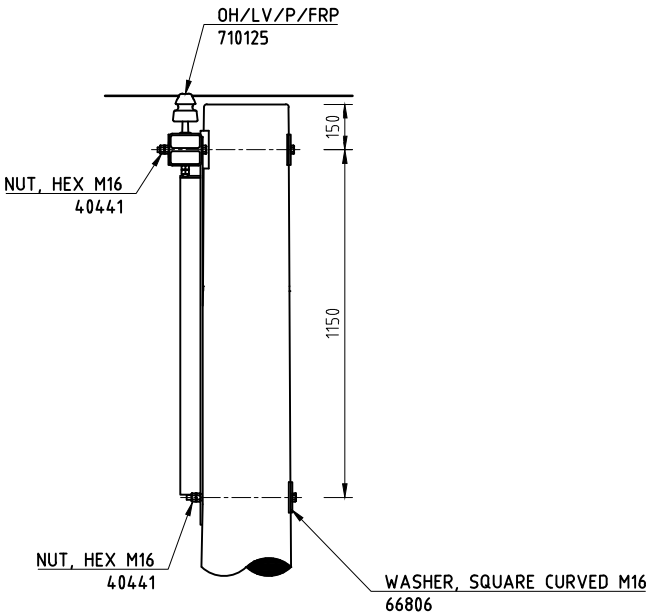

MATERIAL	SAP ASSEMBLY	710152
	DESCRIPTION	LV/O/3/FRP
710125	OH, LV, INSULATOR, PIN TYPE (OH/LV/P/FRP)	4
710124	OH, LV, OFFSET FIBREGLASS CROSSARM (OH/LV/XARM/OFFSET/FRP)	1
323319	BRACE, CROSSARM 1854x75x75x8mm THICK GAL.	1
65158	WASHER, FLAT ROUND M16x50mm GAL.	1
32276	BOLT, HEX HEAD M16x150mm GAL. C/W NUT	1
32292	BOLT, HEX HEAD M16x450mm GAL. C/W NUT	1
40441	NUT,HEX M16 THREAD GALANISED STEEL	2
66806	WASHER, CURVED 75 X 75MM TO FIT M16	1

NOTES:

1. SEE GENERAL NOTES FOR BARE LV.
2. ALL DIMENSIONS ARE IN MILLIMETRES UNLESS OTHERWISE STATED.

ALTERATIONS

ORIGINAL ISSUE

REFERENCE

NEW DRAWING: SUPERSEDES
D-OHC-B024-SD-001
D-OHC-B024-SD-002

TasNetworks

DRAWN	MEGAVAR PTY LTD
DRAFTING CHECK	MEGAVAR PTY LTD
DESIGNED BY	T.KNYZHKA
CHECKED BY	B.WOLSKI
APPROVED BY	A.KETLEY
DATE APPROVED	05-11-2025

© Tasmanian Networks PTY. LTD.
trading as TasNetworks
ABN: 24 167 357 299

NO PART OF THIS DRAWING MAY BE REPRODUCED, STORED IN A RETRIEVAL SYSTEM IN ANY FORM, OR TRANSMITTED BY ANY MEANS WITHOUT THE PRIOR PERMISSION OF TASNETWORKS

TITLE

LV CONSTRUCTIONS
LV BARE ASSEMBLIES
INTERMEDIATE
OFFSET

SCALE: NTS

A4

D - OHC - B114 - SD - 002

REVISION: A

EMF/PDF CREATION DATE 05/11/2025

BM DWG NO D-OHC-B114-SD-002

BM REV A

DWG STATUS STANDARD

CAUTION : Printed document is uncontrolled.

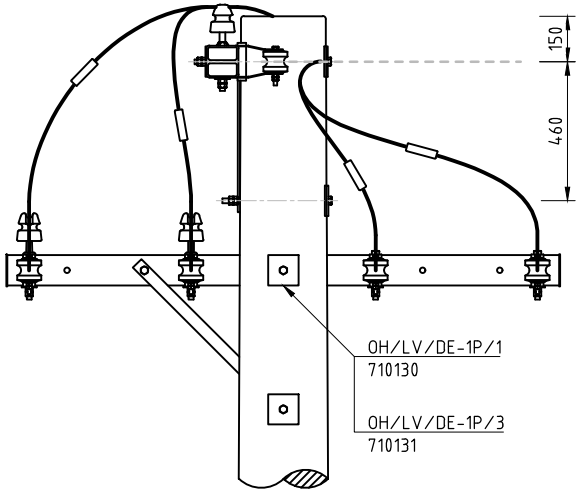

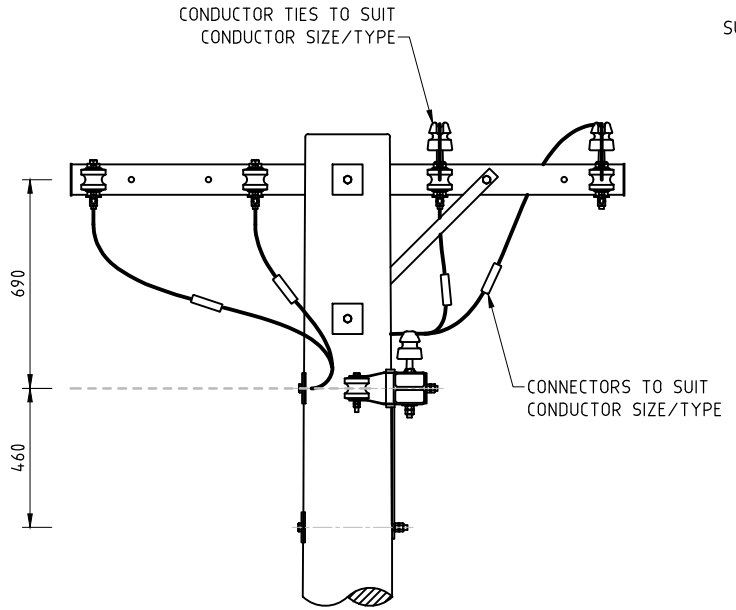

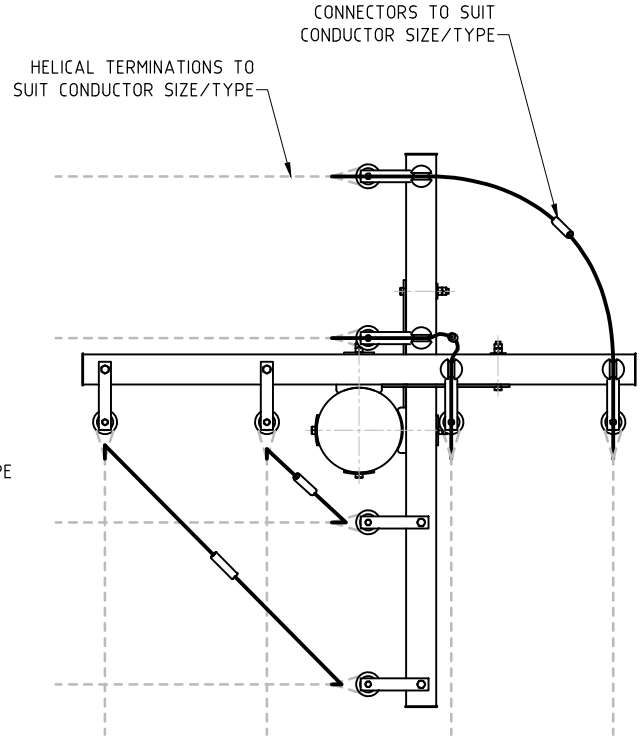

PLAN VIEW

MATERIAL	SAP ASSEMBLY	710146	710147
	DESCRIPTION	LV/RS/1/FRP	LV/RS/3/FRP
710130	OH, LV, DEAD END, 1PH, W EXTRA PIN (OH/LV/DE-1P/1)	2	-
710131	OH, LV, DEAD END, 3PH, W TWO EXTRA PINS (OH/LV/DE-2P/3)	-	2

NOTES:

1. SEE GENERAL NOTES FOR BARE LV.
2. IF BOLTED CONNECTIONS ARE USED NEUTRAL SHALL BE DOUBLE CLAMPS.
3. ALL DIMENSIONS ARE IN MILLIMETRES UNLESS OTHERWISE STATED.

ALTERATIONS

ORIGINAL ISSUE

REFERENCE

NEW DRAWING: SUPERSEDES
D-OHC-B027-SD-001
D-OHC-B027-SD-002

TasNetworks

DRAWN	MEGAVAR PTY LTD
DRAFTING CHECK	MEGAVAR PTY LTD
DESIGNED BY	T.KNYZHKA
CHECKED BY	B.WOLSKI
APPROVED BY	A.KETLEY
DATE APPROVED	05-11-2025

© Tasmanian Networks PTY. LTD.
trading as TasNetworks
ABN: 24 167 357 299

NO PART OF THIS DRAWING MAY BE REPRODUCED, STORED IN A RETRIEVAL SYSTEM IN ANY FORM, OR TRANSMITTED BY ANY MEANS WITHOUT THE PRIOR PERMISSION OF TASNETWORKS

TITLE
LV CONSTRUCTIONS
LV BARE ASSEMBLIES
RIGHT ANGLE STRAIN

SCALE NTS

A4

D - OHC - B115 - SD - 001

REVISION A

BM DWG NO D-OHC-B115-SD-001

BM REV A

EMF/PDF CREATION DATE 05/11/2025

DWG STATUS STANDARD

CAUTION : Printed document is uncontrolled.

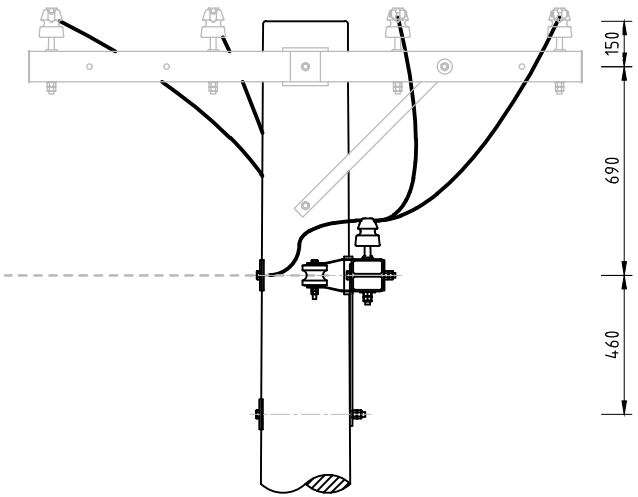

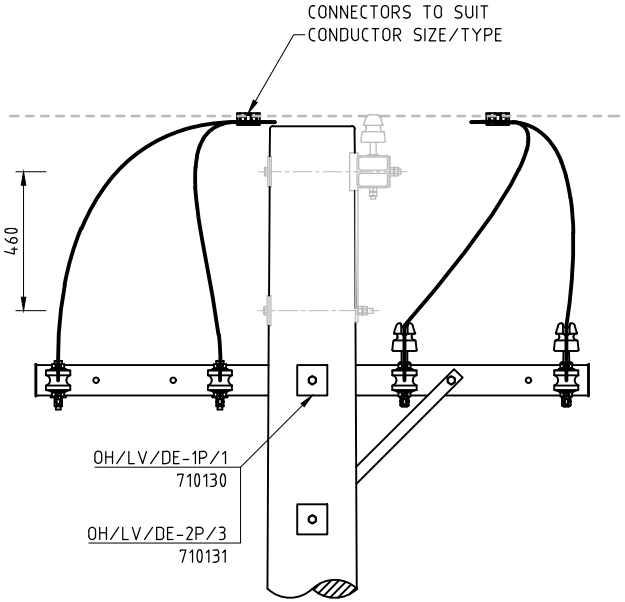

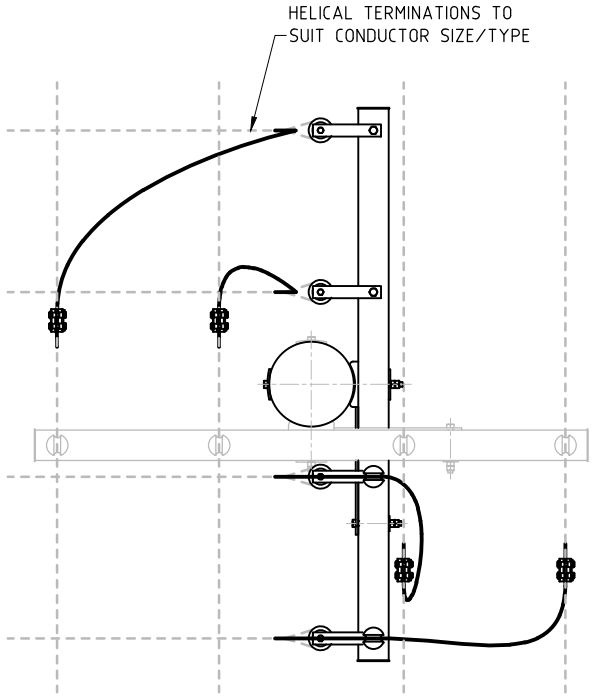

PLAN VIEW

MATERIAL	SAP ASSEMBLY	710148	710149
	DESCRIPTION	LV/T/1/FRP	LV/T/3/FRP
710130	OH, LV, DEAD END, 1PH, W EXTRA PIN (OH/LV/DE-1P/1)	1	-
710131	OH, LV, DEAD END, 3PH, W TWO EXTRA PINS (OH/LV/DE-2P/3)	-	1

NOTES:

1. SEE GENERAL NOTES FOR BARE LV.
2. NEUTRAL SHALL BE DOUBLE CLAMP CONNECTIONS.
3. ALL DIMENSIONS ARE IN MILLIMETRES UNLESS OTHERWISE STATED.

ALTERATIONS

ORIGINAL ISSUE

REFERENCE

NEW DRAWING: SUPERSEDES
D-OHC-B028-SD-001
D-OHC-B028-SD-002

TasNetworks

DRAWN	MEGAVAR PTY LTD
DRAFTING CHECK	MEGAVAR PTY LTD
DESIGNED BY	T.KNYZHKA
CHECKED BY	B.WOLSKI
APPROVED BY	A.KETLEY
DATE APPROVED	05-11-2025

© Tasmanian Networks PTY. LTD.
trading as TasNetworks
ABN: 24 167 357 299

NO PART OF THIS DRAWING MAY BE REPRODUCED, STORED IN A RETRIEVAL SYSTEM IN ANY FORM, OR TRANSMITTED BY ANY MEANS WITHOUT THE PRIOR PERMISSION OF TASNETWORKS

TITLE
LV CONSTRUCTIONS
LV BARE ASSEMBLIES
TEE OFF

SCALE NTS

A4

D - OHC - B116 - SD - 001

REVISION A

BM DWG NO D-OHC-B116-SD-001

BM REV A

EMF/PDF CREATION DATE 05/11/2025

DWG STATUS STANDARD

CAUTION : Printed document is uncontrolled.

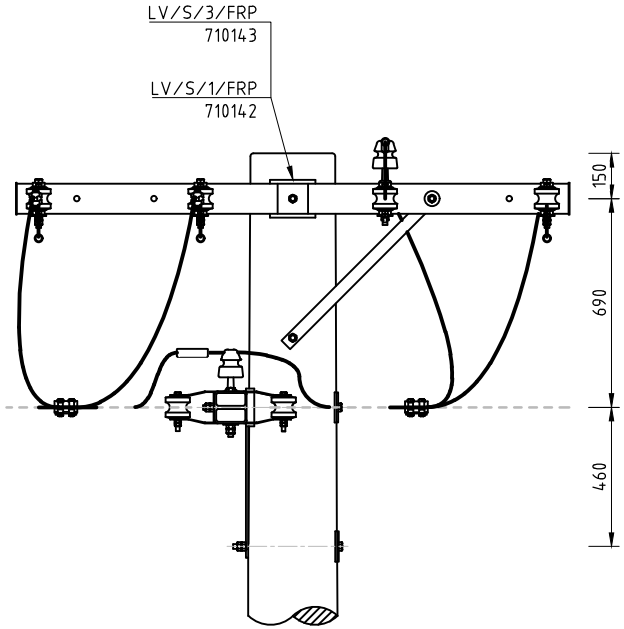

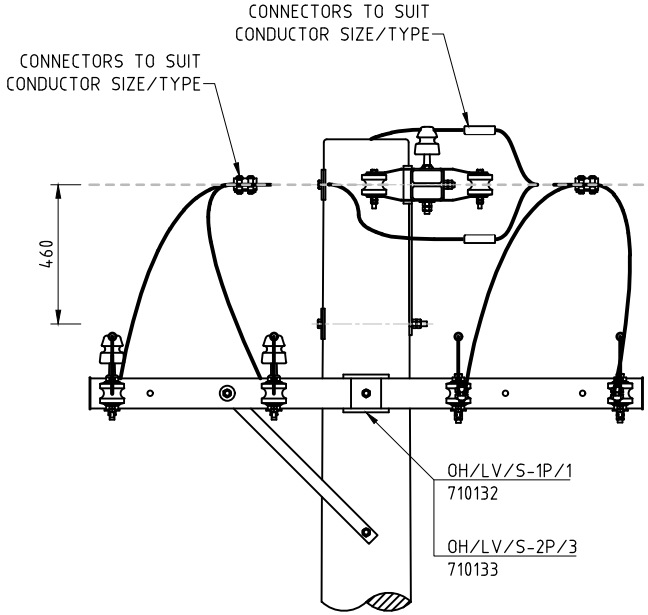

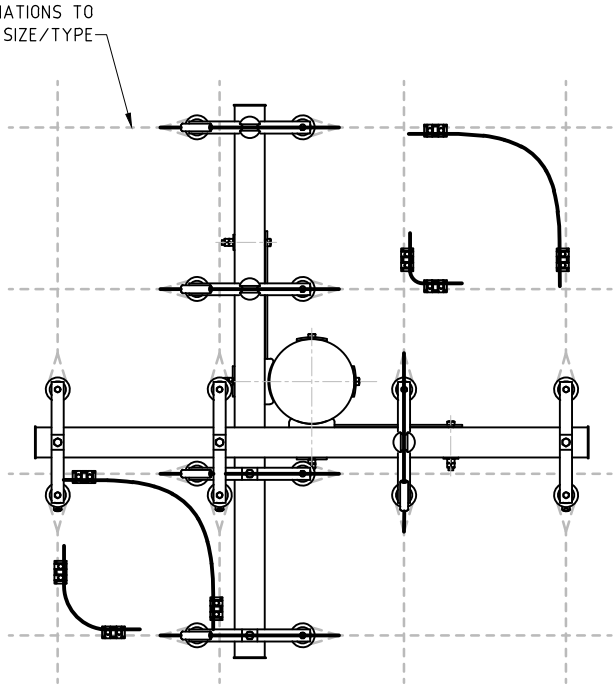

PLAN VIEW

MATERIAL	SAP ASSEMBLY	710150	710151
	DESCRIPTION	LV/X/1/FRP	LV/X/3/FRP
710132	OH, LV, STRAIN, 1PH, W EXTRA PIN (OH/LV/S-1P/1)	1	-
710133	OH, LV, STRAIN, 3PH, W TWO EXTRA PINS (OH/LV/S-2P/3)	-	1
710142	POLETOP, LV, STRAIN, 1PH, FRP XARM (LV/S/1/FRP)	1	-
710143	POLETOP, LV, STRAIN, 3PH, FRP XARM (LV/S/3/FRP)	-	1

NOTES:

1. SEE GENERAL NOTES FOR BARE LV.
2. NEUTRAL SHALL BE DOUBLE CLAMP CONNECTIONS.
3. ALL DIMENSIONS ARE IN MILLIMETRES UNLESS OTHERWISE STATED.

ALTERATIONS

ORIGINAL ISSUE

REFERENCE

NEW DRAWING: SUPERSEDES
D-OHC-B029-SD-001
D-OHC-B029-SD-002

TasNetworks

DRAWN	MEGAVAR PTY LTD
DRAFTING CHECK	MEGAVAR PTY LTD
DESIGNED BY	T.KNYZHKA
CHECKED BY	B.WOLSKI
APPROVED BY	A.KETLEY
DATE APPROVED	05-11-2025

© Tasmanian Networks PTY. LTD.
trading as TasNetworks
ABN: 24 167 357 299

NO PART OF THIS DRAWING MAY BE REPRODUCED, STORED IN A RETRIEVAL SYSTEM IN ANY FORM, OR TRANSMITTED BY ANY MEANS WITHOUT THE PRIOR PERMISSION OF TASNETWORKS

TITLE
LV CONSTRUCTIONS
LV BARE ASSEMBLIES
CROSSOVER

SCALE: NTS

A4

D - OHC - B117 - SD - 001

REVISION: A

BM DWG NO D-OHC-B117-SD-001

BM REV A

EMF/PDF CREATION DATE 05/11/2025

DWG STATUS STANDARD

CAUTION : Printed document is uncontrolled.

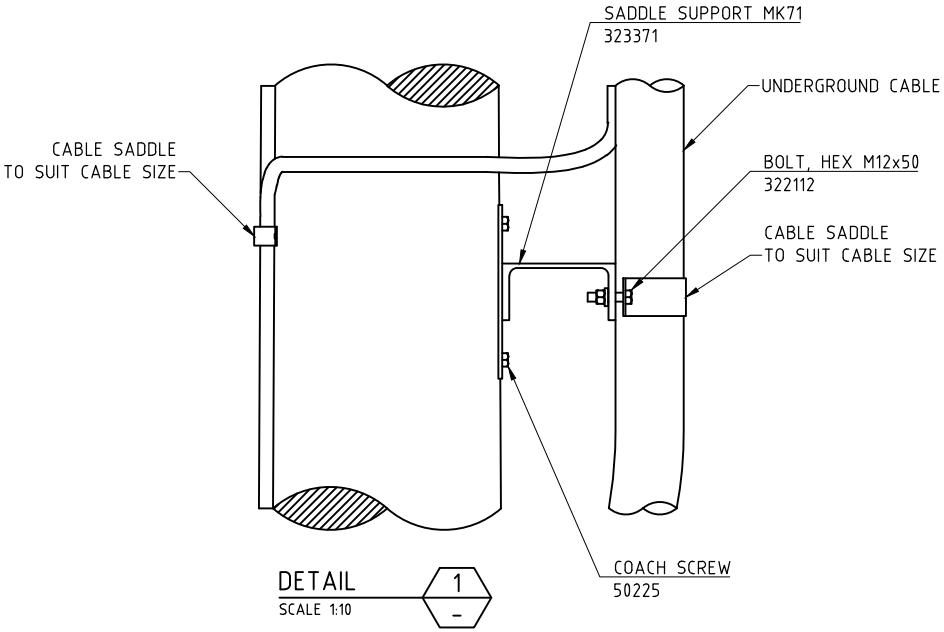

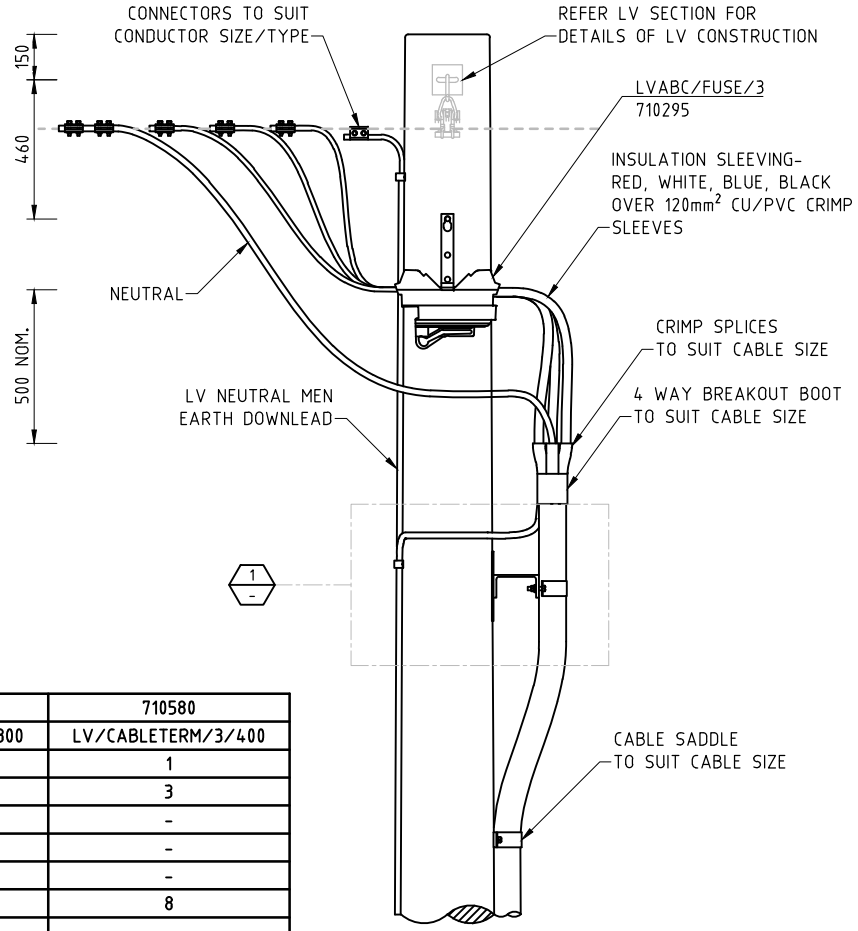

MATERIAL	SAP ASSEMBLY	710577	710578	710579	710580
	DESCRIPTION	LV/CABLETERM/3/185	LV/CABLETERM/3/240	LV/CABLETERM/3/300	LV/CABLETERM/3/400
236321	SWITCHING GROUP, LV 630A 3x1P POLE MOUNT	1	1	1	1
236327	LINK, SWITCH BLADE 400A SIZE-NH2 2GM400	3	3	3	3
94190	WIRE, BLDNG 120mm² x 37/2.03 x 0.6/1 BLK	8	-	-	-
94193	WIRE, BLDNG 150mm² x 37/2.25 x 0.6/1 BLK	-	8	-	-
95185	CABLE, 1CORE x 185mm² DBL INS XLPE CU BLK	-	-	8	-
95240	CABLE, 1CORE x 240mm² DBL INS XLPE CU BLK	-	-	-	8
141198	SPLICE, SL CRIMP LINK 185/120mm² BI-METAL	4	-	-	-
141197	SPLICE, SL CRIMP LINK 240/150mm² BI-METAL	-	4	-	-
141192	SPLICE, SL CRIMP LINK 300/185mm² BI-METAL	-	-	4	-
141199	SPLICE, CRIMP LINK 400/240mm² BI-METAL	-	-	-	4
323374	SADDLE, FULL 50 x 3mm 2-H 45mm CABLE GAL	3	-	-	-
323342	SADDLE, FULL 50 x 3mm 2-H 60mm CABLE GAL	-	3	-	-
323341	SADDLE, FULL 50 x 3mm 2-H 65mm CABLE GAL	-	-	3	-
323340	SADDLE, FULL 50 x 3mm 2-H 75mm CABLE GAL	-	-	-	3
710568	OH/--/CABLESUPPORT	1	1	1	1
710569	OH/--/CABLEGUARD	1	1	1	1
710570	OH/LV/CABLETERM	1	1	1	1
710295	LVABC/FUSE/3	1	1	1	1

NOTES:

1. SEE GENERAL NOTES FOR BARE LV.
2. FOR USE WITH BARE CONDUCTORS OR LVABC.
3. NEUTRAL SHALL BE DOUBLE CLAMP CONNECTIONS TO MAINS.
4. WHEN USED FOR AN UNDERGROUND TO OVERHEAD TRANSITION A SOLID LINK IS TO BE USED.
5. WHEN USED ON A TRANSFORMER OR A CUSTOMER SUPPLY THE CORRECT SIZE FUSE NEEDS TO BE SELECTED.
6. FOR TITAN POLES MASONRY ANCHORS WILL BE USED INSTEAD OF COACH SCREWS.
7. REFER TO BOM'S TABLE FOR CORRECT SIZE BIMETAL SPLICES AND COPPER TAILS TO SUIT UNDERGROUND LV CABLE.
8. ALL DIMENSIONS ARE IN MILLIMETRES UNLESS OTHERWISE STATED.

ALTERATIONS

ORIGINAL ISSUE

REFERENCE

NEW DRAWING: SUPERSEDES
D-OHC-G035-SD-001
D-OHC-G035-SD-002
D-OHC-G035-SD-003

TasNetworks

DRAWN	MEGAVAR PTY LTD
DRAFTING CHECK	MEGAVAR PTY LTD
DESIGNED BY	T.KNYZHKA
CHECKED BY	B.WOLSKI
APPROVED BY	A.KETLEY
DATE APPROVED	05-11-2025

© Tasmanian Networks PTY. LTD.
trading as TasNetworks
ABN: 24 167 357 299

NO PART OF THIS DRAWING MAY BE REPRODUCED, STORED IN A RETRIEVAL SYSTEM IN ANY FORM, OR TRANSMITTED BY ANY MEANS WITHOUT THE PRIOR PERMISSION OF TASNETWORKS

TITLE
LV CONSTRUCTIONS
LV BARE ASSEMBLIES
UNDERGROUND TO OVERHEAD TRANSITION

SCALE: NTS

A4

D - OHC - B118 - SD - 001

REVISION: A

EMF/PDF CREATION DATE 05/11/2025

BM DWG NO D-OHC-B118-SD-001

BM REV A

DWG STATUS STANDARD

BOM No. in SAP	BOM	Material BOM Description	Drawing
710071	OH/--/XARM/BRACE	OH, XARM BRACE, FRP	D-OHC-B110-SD-006
710122	OH/LV/XARM/STD/FRP	OH, LV, STANDARD FIBREGLASS CROSSARM	D-OHC-B110-SD-001
710123	OH/LV/XARM/LONG/FRP	OH, LV, LONG FIBREGLASS CROSSARM	D-OHC-B110-SD-001
710124	OH/LV/XARM/OFFSET/FRP	OH, LV, OFFSET FIBREGLASS CROSSARM	D-OHC-B110-SD-001
710125	OH/LV/P/FRP	OH, LV, INSULATOR, PIN TYPE	D-OHC-B110-SD-002
710126	OH/LV/DE/FRP	OH, LV, INSULATOR, DEADEND TYPE	D-OHC-B110-SD-002
710127	OH/LV/S/FRP	OH, LV, INSULATOR, STRAIN TYPE	D-OHC-B110-SD-002
710128	OH/LV/DE-P/FRP	OH, LV, INSULATOR, DEADEND TYPE WITH PIN	D-OHC-B110-SD-003
710129	OH/LV/S-P/FRP	OH, LV, INSULATOR, STRAIN TYPE WITH PIN	D-OHC-B110-SD-003
710130	OH/LV/DE-1P/1	OH, LV, DEADEND, 1PH, W EXTRA PIN	D-OHC-B110-SD-004
710131	OH/LV/DE-2P/3	OH, LV, DEADEND, 3PH, W TWO EXTRA PINS	D-OHC-B110-SD-004
710132	OH/LV/S-1P/1	OH, LV, STRAIN, 1PH, W EXTRA PIN	D-OHC-B110-SD-005
710133	OH/LV/S-2P/3	OH, LV, STRAIN, 3PH, W TWO EXTRA PINS	D-OHC-B110-SD-005
710134	LV/I/1/FRP	POLETOP, LV, INTERM, 1PH, FRP XARM	D-OHC-B111-SD-001
710135	LV/I/3/FRP	POLETOP, LV, INTERM, 3PH, FRP XARM	D-OHC-B111-SD-001
710137	LV/I/3/FRPLONG	POLETOP, LV, INTERM, 3PH, LONG FRP XARM	D-OHC-B111-SD-001
710138	LV/DE/1/FRP	POLETOP, LV, DEADEND, 1PH, FRP XARM	D-OHC-B112-SD-001
710139	LV/DE/3/FRP	POLETOP, LV, DEADEND, 3PH, FRP XARM	D-OHC-B112-SD-001
710141	LV/DE/3/FRPLONG	POLETOP, LV, DEADEND, 3PH, LONG FRP XARM	D-OHC-B112-SD-001
710142	LV/S/1/FRP	POLETOP, LV, STRAIN, 1PH, FRP XARM	D-OHC-B113-SD-001
710143	LV/S/3/FRP	POLETOP, LV, STRAIN, 3PH, FRP XARM	D-OHC-B113-SD-001
710145	LV/S/3/FRPLONG	POLETOP, LV, STRAIN, 3PH, LONG FRP XARM	D-OHC-B113-SD-001
710146	LV/RS/1/FRP	POLETOP, LV, STRAIN RIGHT, 1PH, FRP XARM	D-OHC-B115-SD-001
710147	LV/RS/3/FRP	POLETOP, LV, STRAIN RIGHT, 3PH, FRP XARM	D-OHC-B115-SD-001
710148	LV/T/1/FRP	POLETOP, LV, TEE OFF, 1PH, FRP XARM	D-OHC-B116-SD-001
710149	LV/T/3/FRP	POLETOP, LV, TEE OFF, 3PH, FRP XARM	D-OHC-B116-SD-001
710150	LV/X/1/FRP	POLETOP, LV, CROSSOVER, 1PH, FRP XARM	D-OHC-B117-SD-001
710151	LV/X/3/FRP	POLETOP, LV, CROSSOVER, 3PH, FRP XARM	D-OHC-B117-SD-001
710152	LV/O/3/FRP	POLETOP, LV, OFFSET, 3PH, FRP XARM	D-OHC-B114-SD-002

710156	OH/LV/EYE/SINGLE/M16	OH, SINGLE EYE, M16 NUT	D-OHC-B102-SD-001
710158	OH/LV/EYE/DOUBLE/M16	OH, DOUBLE EYE, M16 NUT	D-OHC-B102-SD-001
710160	LVABC/I/1/50	POLETOP, LVABC 50MM, INTERM, 1PH	D-OHC-B103-SD-001
710161	LVABC/I/3/50	POLETOP, LVABC 50MM, INTERM, 3PH	D-OHC-B103-SD-001
710162	LVABC/I/1/95	POLETOP, LVABC 95MM, INTERM, 1PH	D-OHC-B103-SD-001
710163	LVABC/I/3/95	POLETOP, LVABC 95MM, INTERM, 1PH	D-OHC-B103-SD-001
710164	LVABC/I/3/150	POLETOP, LVABC 150MM, INTERM, 3PH	D-OHC-B103-SD-001
710170	LVABC/DE/1/50	POLETOP, LVABC 50MM, DEADEND, 1PH	D-OHC-B104-SD-001
710171	LVABC/DE/3/50	POLETOP, LVABC 50MM, DEADEND, 3PH	D-OHC-B104-SD-001
710172	LVABC/DE/1/95	POLETOP, LVABC 95MM, DEADEND, 1PH	D-OHC-B104-SD-001
710173	LVABC/DE/3/95	POLETOP, LVABC 95MM, DEADEND, 3PH	D-OHC-B104-SD-001
710174	LVABC/DE/3/150	POLETOP, LVABC 150MM, DEADEND, 3PH	D-OHC-B104-SD-001
710175	LVABC/S/1/50	POLETOP, LVABC 50MM, STRAIN, 1PH	D-OHC-B105-SD-001
710176	LVABC/S/3/50	POLETOP, LVABC 50MM, STRAIN, 3PH	D-OHC-B105-SD-001
710177	LVABC/S/1/95	POLETOP, LVABC 95MM, STRAIN, 1PH	D-OHC-B105-SD-001
710178	LVABC/S/3/95	POLETOP, LVABC 95MM, STRAIN, 3PH	D-OHC-B105-SD-001
710179	LVABC/S/3/150	POLETOP, LVABC 150MM, STRAIN, 3PH	D-OHC-B105-SD-001
710180	LVABC/RS/1/50	POLETOP, LVABC 50MM, STRAIN RIGHT, 1PH	D-OHC-B105-SD-002
710181	LVABC/RS/3/50	POLETOP, LVABC 50MM, STRAIN RIGHT, 3PH	D-OHC-B105-SD-002
710182	LVABC/RS/1/95	POLETOP, LVABC 95MM, STRAIN RIGHT, 1PH	D-OHC-B105-SD-002
710183	LVABC/RS/3/95	POLETOP, LVABC 95MM, STRAIN RIGHT, 3PH	D-OHC-B105-SD-002
710184	LVABC/RS/3/150	POLETOP, LVABC 150MM, STRAIN RIGHT, 3PH	D-OHC-B105-SD-002
710185	LVABC/T/1/50	POLETOP, LVABC 50MM, TEE OFF, 1PH	D-OHC-B106-SD-001
710186	LVABC/T/3/50	POLETOP, LVABC 50MM, TEE OFF, 3PH	D-OHC-B106-SD-001
710187	LVABC/T/1/95	POLETOP, LVABC 95MM, TEE OFF, 1PH	D-OHC-B106-SD-001
710188	LVABC/T/3/95	POLETOP, LVABC 95MM, TEE OFF, 3PH	D-OHC-B106-SD-001
710189	LVABC/T/3/150	POLETOP, LVABC 150MM, TEE OFF, 3PH	D-OHC-B106-SD-001
710577	LV/CABLETERM/3/185	LV, POLETOP, CABLE TERM, 3PH, 185MM	D-OHC-B118-SD-001
710578	LV/CABLETERM/3/240	LV, POLETOP, CABLE TERM, 3PH, 240MM	D-OHC-B118-SD-001
710579	LV/CABLETERM/3/300	LV, POLETOP, CABLE TERM, 3PH, 300MM	D-OHC-B118-SD-001

710580	LV/CABLETERM/3/400	LV, POLETOP, CABLE TERM, 3PH, 400MM	D-OHC-B118-SD-001
710593	LVABC/O/3/95	POLETOP, LVABC 95MM, OFFSET, 3PH	D-OHC-B103-SD-002